Taylor & Francis
Taylor & Francis Group

Journal of the Air & Waste Management Association

ISSN: 1096-2247 (Print) (Online) Journal homepage: http://www.tandfonline.com/loi/uawm20

Development and Laboratory Performance Evaluation of a Personal Cascade Impactor

Philip Demokritou , Tarun Gupta , Stephen Ferguson & Petros Koutrakis

To cite this article: Philip Demokritou , Tarun Gupta , Stephen Ferguson & Petros Koutrakis (2002) Development and Laboratory Performance Evaluation of a Personal Cascade Impactor, Journal of the Air & Waste Management Association, 52:10, 1230-1237, DOI: 10.1080/10473289.2002.10470855

To link to this article: http://dx.doi.org/10.1080/10473289.2002.10470855

Published online: 27 Dec 2011.

Submit your article to this journal

Article views: 140

View related articles

Citing articles: 18 View citing articles

Full Terms & Conditions of access and use can be found at
http://www.tandfonline.com/action/journalInformation?journalCode=uawm20

Download by: [University of North Texas] **Date:** 06 January 2017, At: 22:00

TECHNICAL PAPER

ISSN 1047-3289 *J. Air & Waste Manage. Assoc.* **52**:1230-1237
Copyright 2002 Air & Waste Management Association

Development and Laboratory Performance Evaluation of a Personal Cascade Impactor

Philip Demokritou, Tarun Gupta, Stephen Ferguson, and Petros Koutrakis
Environmental Science and Engineering Program, School of Public Health, Harvard University, Boston, Massachusetts

ABSTRACT

This paper presents the design and laboratory evaluation of a personal cascade impactor. The system is compact, lightweight, and uses a single battery-operated sampling pump. It operates at a flow rate of 5 L/min and consists of four impaction stages, each equipped with slit-shaped acceleration nozzles, and a backup filter. The impactor was calibrated using polydisperse particles. The 50% cut points of the four stages were 9.6, 2.6, 1.0, and 0.5 µm, respectively. The backup filter is placed downstream of the fourth stage and is used to collect the particles with an aerodynamic diameter smaller than 0.5 µm ($d_p < 0.5$ µm). The major feature of this novel sampler is its ability not only to fractionate the particles with an aerodynamic diameter smaller than 10 µm to the various size fractions, but also to collect them onto relatively small polyurethane foam substrates without using adhesives. Although the impaction substrates are not coated with adhesives such as grease or mineral oil, particle bounce and re-entrainment losses were found to be insignificant. Interstage losses of particles smaller than 0.5 µm were less than 10%; for fine particles, less than 5%; and for coarse particles, less than 12%. The pressure drop across the four stages and the backup filter were 0.015 kPa (0.153 cm H_2O), 0.025 kPa (0.255 cm H_2O), 0.274 kPa (2.794 cm H_2O), 0.323 kPa (3.294 cm H_2O), and 0.370 kPa (3.773 cm H_2O), respectively. Particles can be easily recovered from the foam substrates using aqueous extraction.

IMPLICATIONS

There is concern over the relative importance of the different size fractions of particulate matter and their chemical and toxicological characteristics with respect to human health. Directly monitoring a subject's breathing zone using a personal monitoring system dramatically increases our ability to accurately estimate human exposure to particulate matter. Such a personal cascade impactor system was developed and characterized. This lightweight and compact system operates by a battery-operated pump and fractionates particles with a diameter smaller than 10 µm at various size fractions. Particles are collected on inert polyurethane foam substrates, without the use of adhesives or coatings. The collected particles can be easily extracted and used for both chemical and toxicological characterization studies.

INTRODUCTION

An abundance of epidemiological data exists from studies both in the United States and Europe showing a strong association between exposure to particulate matter (PM), and especially its PM_{10} and $PM_{2.5}$ size fractions, and increased mortality and morbidity.[1-5] However, this association is based on indirect determinations of personal exposure determined by either ambient measurements alone or by microenvironment monitoring.

These indirect methods of estimating personal exposures have been shown to be poor indicators of personal exposure,[6] particularly for active individuals (i.e., school-age children, young adults).[7,8] Furthermore, it was reported that differences between concentration measured by the personal and stationary monitors depend on particle size.[9] There is a growing need for both a detailed size classification and chemical characterization of the personal exposure to PM. Various personal monitoring systems have been developed[10-12] to measure some size fractions of PM (i.e., $PM_{2.5}$ and PM_{10}), as well as chemical components such as some inorganic species (e.g., sulfates, nitrates) and elemental and organic carbon.

Particles can be classified into different size categories using impaction technology.[13] Several cascade impactors (sequential arrangements of inertial impactors in order of decreasing particle size) have been designed to classify particles from 5 nm to 50 µm.[14-16] A major problem associated with the application of impactors to classify and collect particles is the bounce of particles from the impaction substrate. In order to minimize particle bounce and re-entrainment, impaction substrates are usually coated with adhesives such as mineral oil and grease.[17-21] However, the use of non-inert coatings on the substrates prohibits the chemical and toxicological characterization

of the collected particles. Furthermore, these impactors have shown limited collection capacity due to the nature of the impaction substrate and also operate at high-pressure drop (more than 30 in. of water pressure) for the submicron cut point stages.

Recently, we have developed a new impaction substrate that eliminates the use of adhesives, such as grease or mineral oil, while minimizing particle bounce-off and re-entrainment loses. This polyurethane foam (PUF) substrate (density = 0.02 g/cm^3, Merryweather Foam) can be used to collect large quantities of particles (mg to g levels) for toxicological, biological, and chemical characterization studies.[22] This PUF substrate was used in a number of impactors, including the high-volume cascade impactor[23] and the high-volume low cut point impactor.[24]

In this paper we present the design and development of a personal cascade impactor (CASPER) that utilizes PUF as the collection medium. This impactor includes four impaction stages (10.0, 2.5, 1.0, and 0.5 µm, respectively) and a backup filter that collects particles below 0.5 µm. The salient feature of the CASPER is its ability to collect large amounts of particles onto small and inert pieces of impaction substrate without the use of adhesives. This personal sampler can be used to provide better estimates of human exposure to all size fractions of particulate matter and to improve our understanding of the chemical and toxicological characteristics of particles.

DESIGN CONSIDERATIONS

The cut point of each impaction stage was calculated using the Stokes equation, as follows:

$$\mathrm{Stk} = \frac{\rho_p \bullet d_a^2 \bullet U \bullet C_c}{9 \bullet \eta \bullet W} \tag{1}$$

where ρ_p is the particle density (g/m^3), d_a is the particle diameter (µm), U is the jet velocity (m/sec), η is the dynamic viscosity of the air (Pa.s), W is the nozzle width (m), and C_c is the Cunningham slip correction factor. The slip correction factor is given by the following equation[14]:

$$C_c = 1 + \frac{2}{P \bullet d_p} \bullet \left[6.32 + 2.01 e^{(-0 \bullet 1095 P d_p)} \right] \tag{2}$$

where P is the absolute atmospheric pressure upstream of the nozzle. The Stokes equation was used to determine the dimensions of the acceleration nozzles. For the first stage, a layer of vacuum grease (0.32 cm thick) is used as an impaction substrate. A razor blade is used to create a smooth impaction surface. This is necessary to minimize bounce-off and break-up losses of large particles (d_a > 10 µm) and to obtain a sharp cut-off curve.[12,21] For this stage, a $\sqrt{Stk_{50}}$ value of 0.5 was used.[13] For the other three stages, which use polyurethane foam as an impaction substrate, lower $\sqrt{Stk_{50}}$ values were used (0.23–0.38). The Reynolds number (Re) was calculated using the following equation:

$$\mathrm{Re} = \frac{U \bullet \rho_{air} \bullet A}{\eta} = \frac{\frac{Q}{L \bullet W} \bullet \rho_{air} \bullet \frac{2LW}{(L+W)}}{\eta} = \frac{2 \bullet Q \bullet \rho_{air}}{\eta \bullet (L+W)} \tag{3}$$

where ρ_{air} is the air density (g/m^3), A is the hydraulic diameter of the nozzle which is equal to $2LW/(L+W)$ for rectangular nozzles or the nozzle diameter for round nozzles, L is the length of the nozzle (m), and Q is the flow rate (m^3/min). According to the numerical analysis of conventional impactors by Marple et al.,[25] the Reynolds number should be below 3000. A Reynolds number over this limit would result in a highly turbulent flow and increased particle losses. Experimental results have also shown that the efficiency curve will be sharpest for Re values between 500 and 3000.[25]

PUF was used as an impaction substrate to collect the various size fractions of particles with an aerodynamic diameter smaller than 10 µm. This is a polymeric material with stable physical characteristics, low chemical background (when cleaned properly), and high collection efficiency characteristics.[24,26] As we have previously reported, the use of PUF substrates improves the performance of inertial impactors by minimizing bounce-off and re-entrainment losses, as compared to coated and uncoated flat plate substrates.[12,22,24] Since for the same nozzle geometry and flow rate, lower cut points can be achieved as compared to those for flat plate substrates, the pressure drop is substantially reduced for the same size cut point.[22,24] Another advantage of foam substrates is their ability to collect large amounts of particles per unit of surface area (2.15 g/cm^2).[24] This increases the sensitivity of toxicological and chemical characterization studies.[26,27]

DESCRIPTION OF THE CASPER

A fully assembled CASPER is shown in Figure 1. The sampling device consists of four impactor stages and a backup filter. The CASPER is compact (12 [h] × 4 [o.d.] cm) and is relatively lightweight (~0.3 kg). The system uses a flow controlled, single personal sampling pump that operates at a flow rate of 5 L/min (Model AFC 400S, BGI Inc.). The physical characteristics, pressure drop, and the cut point of each impactor stage are presented in Table 1.

For the first stage, which is designed to remove particles larger than 10 µm, a greased flat surface is used as an impaction substrate. This stage is not used for chemical analysis. It utilizes a round acceleration nozzle (0.60 cm diameter). The other three stages all use slit-shaped acceleration nozzles (see Figure 1). The nozzle widths are 0.10, 0.10, and 0.18 cm for the fourth, third, and second stages, respectively (see Table 1).

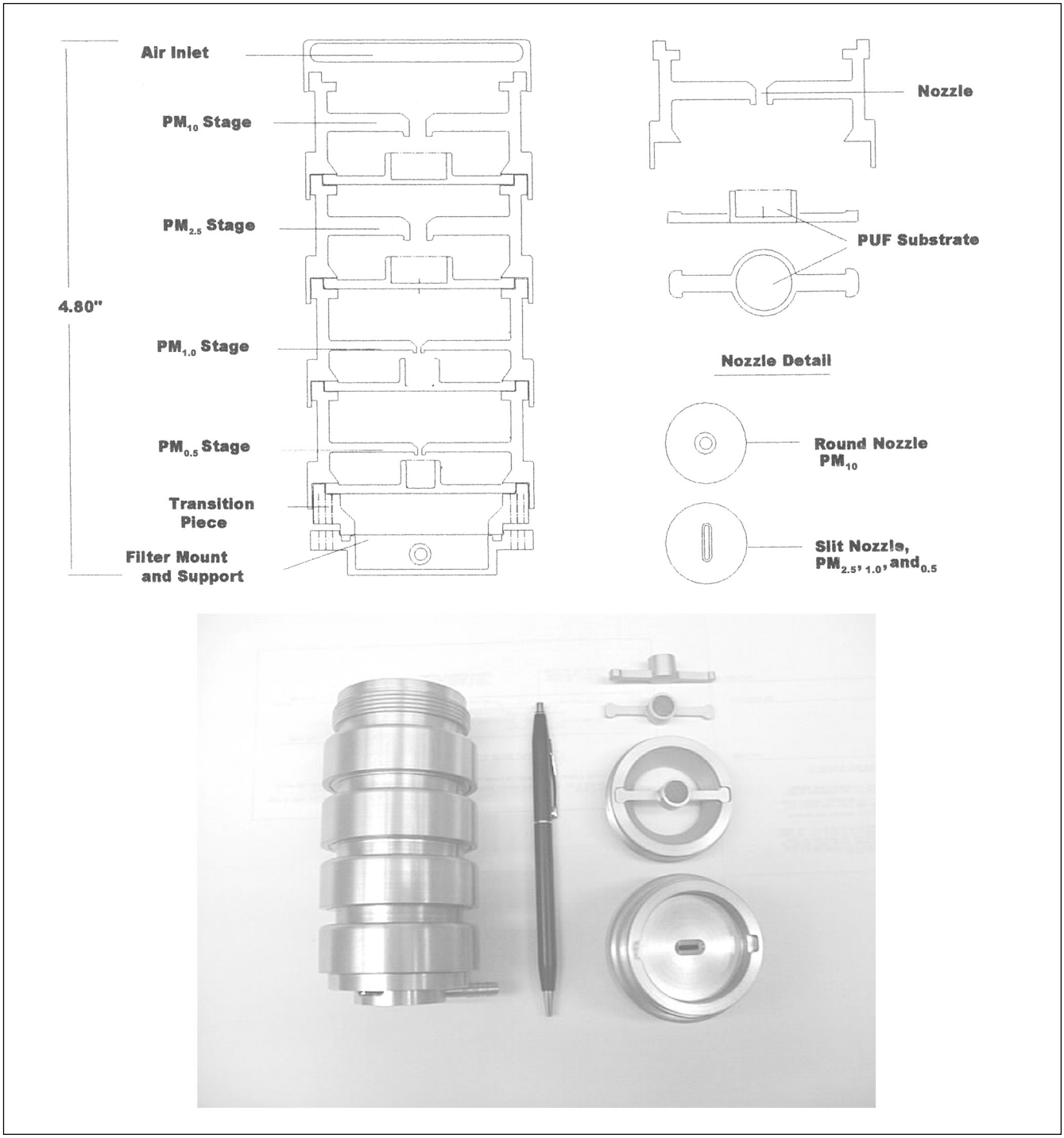

Figure 1. Personal cascade impactor (CASPER).

PUF (density = 0.020 g/cm^3, Merryweather Foam) is used as an impaction substrate for the second, third, and fourth stages. The optimum substrate-to-nozzle distance (S) and the size of impaction substrate (D) were determined experimentally. S is 0.71, 0.26, 0.16, and 0.16 cm for the first, second, third, and fourth stages, respectively. The diameters of the impaction substrates are first stage: 2.54 cm (4.1W); second stage: 1.30 cm (7.2W); third stage: 1.30 cm (13.0W); fourth stage: 1.30 cm (13.0W) (see Table 1). Furthermore, the thickness of the PUF for all stages is 0.64 cm, to ensure that particles do not penetrate through the PUF and reach the substrate holder.

Finally, particles with size below 0.5 µm are collected on a backup filter. The criteria for the selection of the backup filter material were (1) high capacity, (2) low blank levels, (3) high collection efficiency, and (4) low pressure drop. A 37-mm polypropylene fiber filter (Monadnock, Grade 5300), which was previously evaluated[23] was used as a

Table 1. Physical characteristics and theoretically and experimentally calculated characteristics of cascade impactor.

Stage	1	2	3	4
		Physical Characteristics		
Substrate	**Grease**	**PUF**	**PUF**	**PUF**
L (cm)[a]	–	0.787	0.457	0.381
W (cm)[b]	0.600	0.180	0.102	0.102
S (cm)[c]	0.700	0.261	0.163	0.163
S/W	1.16	1.45	1.60	1.60
D (cm)[d]	2.54	1.27	1.27	1.27
		Theoretical Calculations		
U (cm/s)[e]	295	587	1788	2149
Re[f]	1177	1409	2427	2913
		Experimental Results		
d_{50}[g]	9.60	2.64	0.95	0.52
s[h]	1.12	1.39	1.21	1.21
$\sqrt{Stk}$[i]	0.50	0.38	0.34	0.22
ΔP (kPa)[j]	0.015	0.025	0.274	0.323

[a]L = nozzle length; [b]W = nozzle width; [c]S = substrate-to-nozzle distance; [d]D = substrate width; [e]U = nozzle air velocity; [f]Re = Reynolds number; [g]d_{50} = 50% cut point; [h]s = collection efficiency curve sharpness; [i]$\sqrt{Stk}$ = square root of Stokes number; [j]ΔP = pressure drop.

backup filter. This filter shows collection efficiency over 95%, while maintaining a reasonably low pressure drop (0.37 kPa or 3.77 cm H_2O) at a 5 L/min flow rate.

METHODS

The experimental setup is shown schematically in Figure 2. The apparatus consisted of three components: the particle generation system, the particle mixing system, and the particle monitor instruments. The particle generation system used an aqueous suspension of hollow glass spheres (nominal size 2–20 µm, density = 1.10 g/cm^3 Polysciences). To achieve continuous and stable generation of aerosolized particles, the aqueous suspension flowed into a nebulizer (Retec Model X-70/N, with a pressure of 7 psi), with excess flow out of the nebulizer reservoir into a waste container. The aerosol was mixed with filtered dried room air. The test air mixture of polydisperse glass spheres then passed into the top end of a vertical cylindrical duct (150 cm [l] × 7.6 cm [i.d.]) made of anodized aluminum. Additional filtered room air was also added at the top of the duct. Turbulence was induced near the top of the duct, using a rectangular plate, to ensure uniform concentration throughout the duct. Also, for the upstream measurements the isokinetic probe was placed at a downstream distance of 10 times the cylindrical duct diameter from the entrance of the duct, to ensure uniform concentration levels at the sampling point.

Each stage of the CASPER was evaluated separately. The sampler, using one stage at a time, was mounted at the bottom of the dilution tube. The particle number concentration and size distribution were measured for a period of 10 minutes upstream and downstream of the sampler (impaction stage) using isokinetic probes. This sequence was repeated three times. An Aerodynamic Particle Sizer (APS 3320, TSI Inc.) and a Scanning Mobility Particle Sizer (SMPS, TSI Inc.) were used to measure particles with diameters from 0.5 to 20 µm and from 0.02 to 0.5 µm, respectively. Even though the nominal minimum mass median sizes for both the hollow and solid spheres were 2 and 3 µm respectively, the number concentrations for both types of spheres for sizes down to 0.02 µm were sufficient to perform SMPS experiments. Also, both APS and SMPS were not used for sampling at the same time. Additionally, separate isokinetic sampling probes were used for the APS and SMPS. A representative figure depicting the upstream number concentration of the generated aerosol as a function of the aerodynamic diameter is shown in Figure 2.

Particle losses for each separate stage of the sampler (particle losses in each stage walls and jet nozzle) were also measured the same way as described above, using the tested impaction stage without the impaction substrate.

The collection efficiency for a given particle size, $E(d_a)$, for either the impaction substrates or the backup filter, was calculated as follows:

$$E(d_a) = \frac{C(d_a)}{T(d_a)} = \frac{T(d_a) - P(d_a)}{T(d_a)} \tag{4}$$

where $T(d_a)$, $C(d_a)$, and $P(d_a)$ are the number of total, collected, and penetrated particles having an aerodynamic diameter of d_a, respectively. The collection efficiency data were fitted using the sigmoidal equation (Sigma Plot 2000) as follows:

$$E(d_a) = \frac{A_1}{\left(1 + e^{\frac{(d_a - x^o)}{d}}\right)^c} + A_2 \tag{5}$$

where x^o is the median aerodynamic diameter, d is the width of the fitting, and A_1, A_2, and c are the coefficients determined by the algorithm. The sharpness (s) of the collection efficiency curve was calculated using the following equation:

$$s = \sqrt{\frac{d_{84}}{d_{16}}} \tag{6}$$

where d_{84} and d_{16} are the sizes of particles having collection efficiencies of 84% and 16%, respectively.[13]

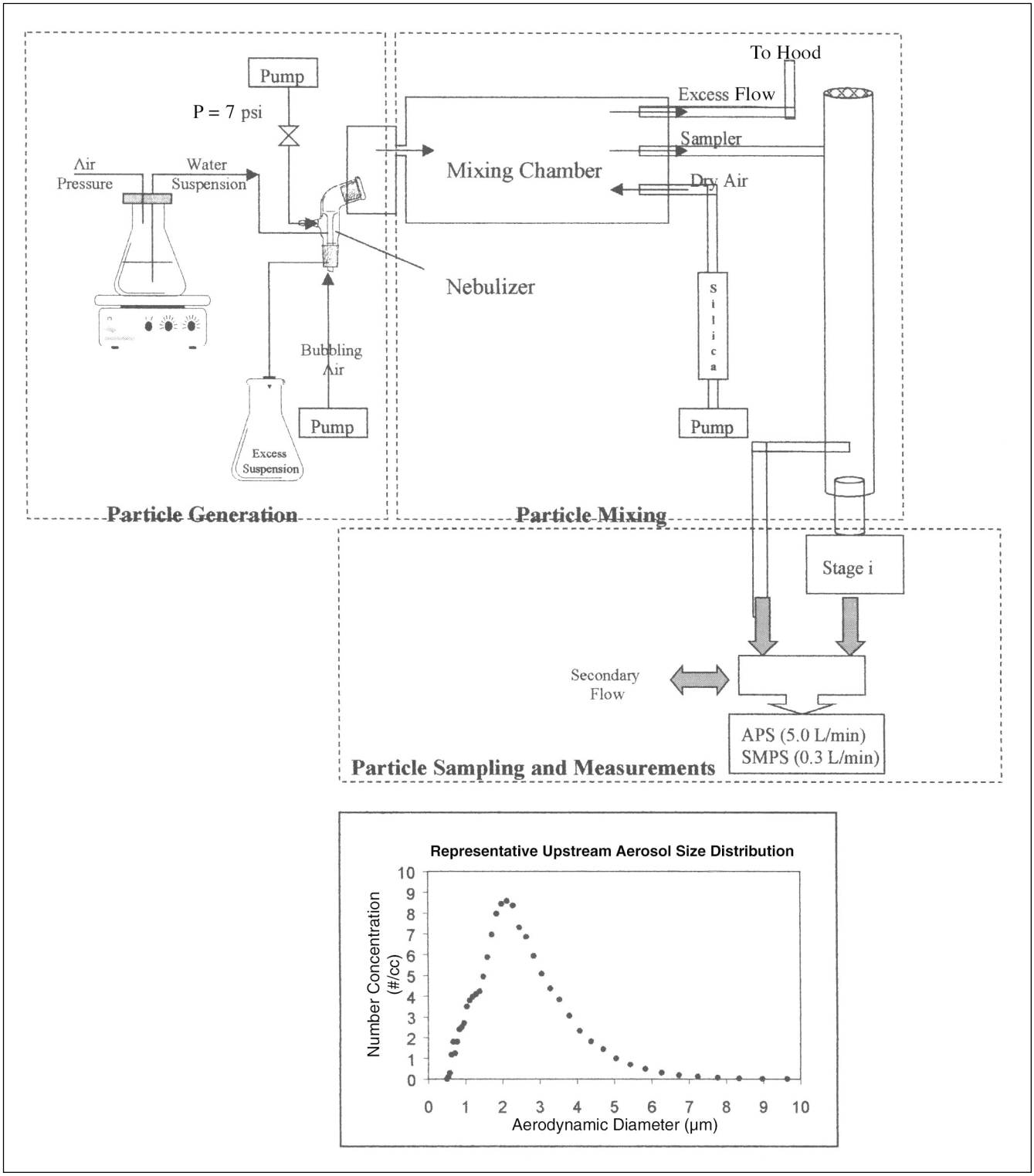

Figure 2. Experimental setup for the characterization of the impaction stages.

RESULTS AND DISCUSSION

Impactor Calibration Experiments

The collection efficiency curves for the four cascade impactor stages are shown in Figure 3. The experimentally determined cut points (d_{50}, µm), sharpness of the collection efficiency curve (s), and pressure drop (ΔP, kPa) are presented in Table 1.

The first stage is designed to remove large particles ($d_a > 10$ µm) (see Table 1). The experimentally determined cut point for this stage is 9.6 µm, which corresponds to $\sqrt{Stk} = 0.5$. The sharpness of the collection efficiency curve is 1.12, which indicates an excellent separation of particles larger than the cut point from the airstream (see Figure 3). The $\sqrt{Stk}$ number and sharpness of the efficiency curve

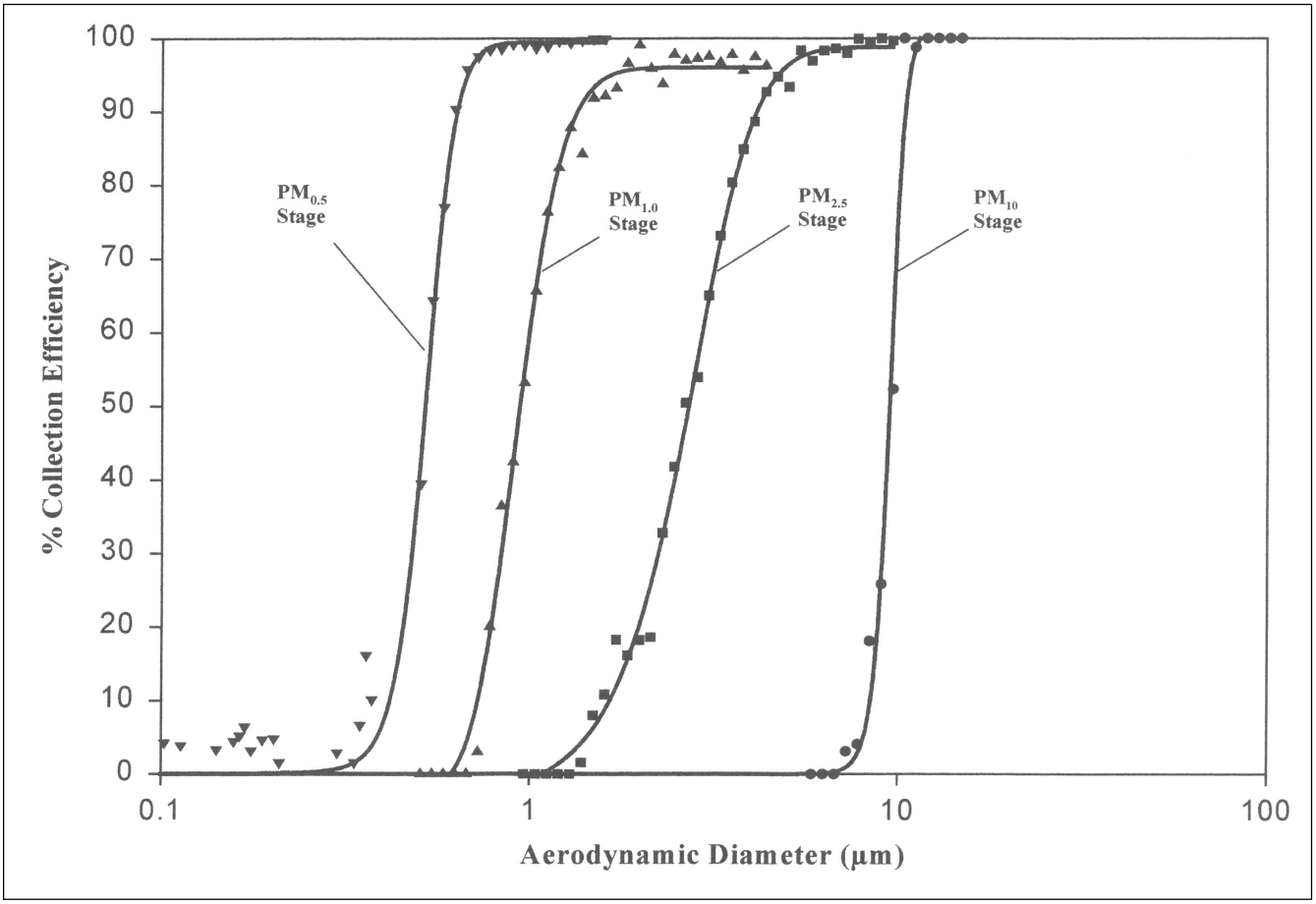

Figure 3. Collection efficiency curves of all the impaction stages of CASPER.

for this first stage are similar to those previously reported for impactors with round nozzles.[24,25] Pressure drop is only 0.015 kPa (0.153 cm H_2O).

The experimentally determined cut point of the second impactor stage is 2.6 µm ($\sqrt{Stk}$ = 0.38, s = 1.4) (see Table 1). The sharpness of the curve for this stage is quite good. For particles above 4.0 µm the collection efficiency was higher than 95% (see Figure 3). This suggests that coarse particle bounce-off and re-entrainment losses were insignificant. The experimentally determined cut point of this stage is smaller than the theoretically calculated (d_a = 4.9 µm) for a flat rigid surface impaction substrate, assuming a $\sqrt{Stk}$ = 0.7. This cut point decrease was recently reported for both rectangular and round nozzles and was attributed to the penetration of some air streamlines into the porous polyurethane foam surface.[22,24] For this stage the pressure drop is only 0.025 kPa (0.255 cm H_2O).

The experimental cut point and $\sqrt{Stk}$ for the third stage are 0.95 and 0.34 µm, respectively. The Stokes number is similar to that of the second stage. The sharpness of the collection efficiency curve (s = 1.21) is excellent and is adequate to effectively collect (up to 97%) particles above 1.5 µm (see Table 1 and Figure 3). Pressure drop is 0.274 kPa (2.794 cm H_2O).

The experimental cut point and $\sqrt{Stk}$ for the fourth stage are 0.5 and 0.22 µm, respectively (see Table 1). The pressure drop across this stage is still very small (0.323 kPa or 3.294 cm H_2O). The collection efficiency curve sharpness is excellent (s = 1.21), and as indicated in Figure 3, collection of particles with diameters above 0.7 µm was higher than 99%.

Inertial particle losses within CASPER may be caused by the turbulent flow in the acceleration nozzle region, at flow turns, and at the flow exit/entrance between stages. Particle losses inside each stage were determined by measuring particles upstream and downstream of the stage, with the substrate removed. It is worth mentioning that the collection efficiencies for each stage illustrated in Figure 3 include particles collected on both the impaction substrate and particles lost on stage walls and acceleration nozzle. Figure 4 illustrates the particle losses in each stage as a function of the particle aerodynamic diameter. It shows the combined picture of the overall particle losses derived from testing each individual impaction stage. Coarse particle losses (2.5–10 µm) increased from 3% for 4 µm particles to 12% for particles with diameters larger than 8 µm. Fine particle losses are minimal (less than 5%). For particles with an aerodynamic diameter smaller than 0.3 µm, losses

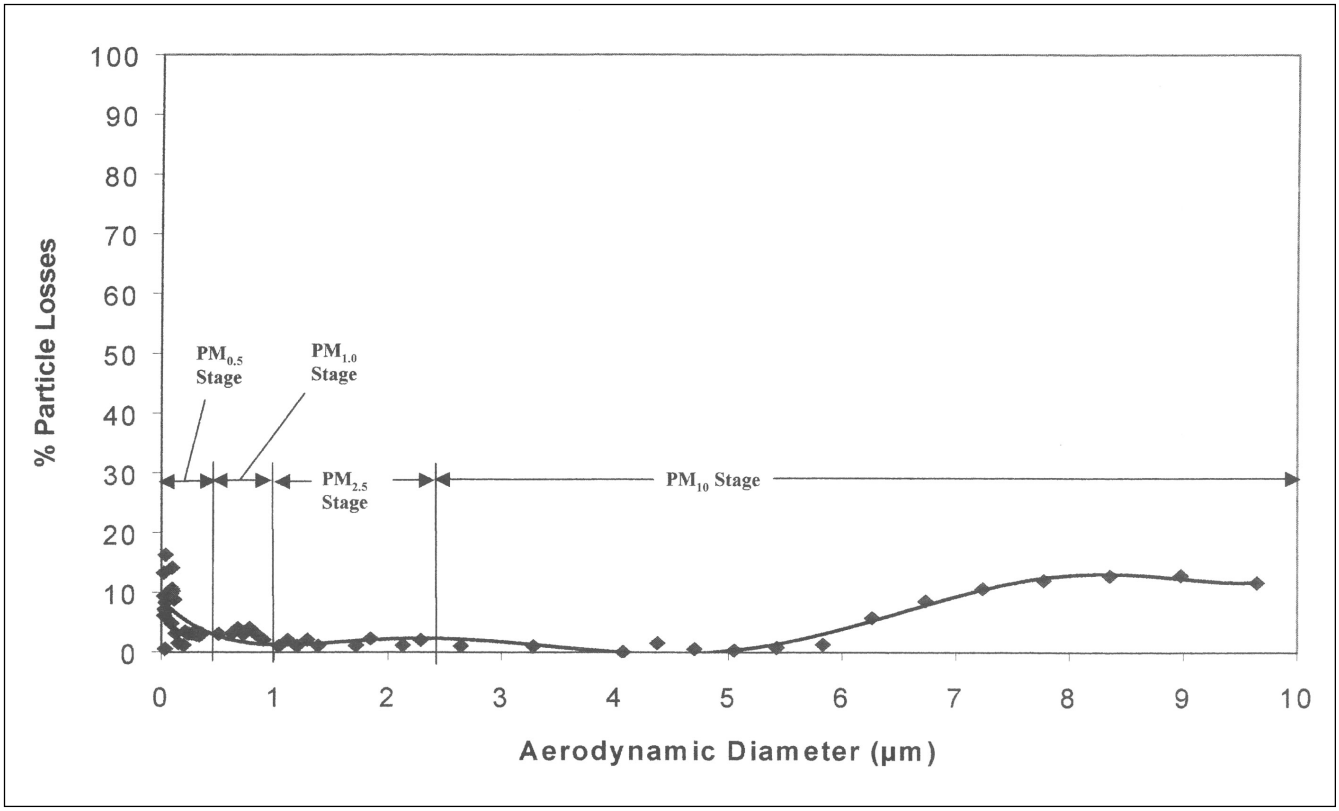

Figure 4. Overall particle losses in the CASPER based on the combination of interstage losses for each impaction stage. (Curve-fitting equation: $y = 0.0038x^6 - 0.1157x^5 + 1.3308x^4 - 7.0728x^3 + 17.754x^2 - 19.42x + 8.7405$)

increased up to 10% due to the increased diffusional deposition of these small particles. Similar results were previously reported for other cascade impactors.[16,23,24]

CONCLUSIONS

A personal cascade impactor (CASPER) was developed and evaluated in laboratory experiments. The sampler is compact and lightweight. A battery-operated pump is used to operate the system at a 5 L/min flow rate. It consists of four stages and a backup filter. The size cut points of the four stages are 9.6, 2.6, 1.0, and 0.5 µm, respectively. The versatile design of the CASPER allows for the inclusion of additional stages. CASPER can be used to classify all the size fractions of PM_{10} and collect particles for toxicological, biological, and chemical characterization studies. The use of PUF as an impaction substrate eliminates the use of adhesives, such as grease or mineral oil, while minimizing particle bounce-off and re-entrainment losses in the system. The performance of the cascade impactor was examined through a series of laboratory tests. The overall sampler performance demonstrates its suitability for personal exposure assessment studies.

An ongoing field intercomparison study between this sampler and other reference samplers is expected to finish in the next few months. This study will enable us to provide further validation of our sampler and use CASPER to estimate the size distribution of atmospheric aerosols. Results from this study will be published in another paper.

ACKNOWLEDGMENTS

The laboratory performance evaluation of the sampler was supported by EPA/Harvard Particle Health Effects Center (EPA Grant No. R827 353-01-0).

REFERENCES

1. Dockery, D.W.; Pope, C.A. Acute Effects of Particulate Air Pollution; *Ann. Rev. Pub. Health* **1994**, *15,* 107-132.
2. Neas, L.M.; Dockery, D.W.; Koutrakis, P.; Speizer, F.E. Fine Particles and Peak Flow in Children: Acidity versus Mass; *Epidemiol.* **1999**, *10,* 550-553.
3. Pope, C.A.; Verrier, R.L.; Lovett, E.G.; Larson, A.C.; Raizenne, M.E.; Kanner, R.E.; Schwartz, J.; Villegas, M.; Gold, D.R.; Dockery, D.W. Heart Rate Variability Associated with Particulate Air Pollution; *Amer. Heart. J.* **1999**, *138,* 890-899.
4. Burnett, R.T.; Cakmak, S.; Brook, J.R.; Krewski, D. The Role of Particulate Size and Chemistry in the Association between Summertime Ambient Air Pollution and Hospitalization for Cardiovascular Diseases; *Environ. Health Persp.* **1997**, *105,* 614-620.
5. Castillejos, M.; Borja-Aburto, V.H.; Dockery, D.W.; Gold, D.R.; Loomis, D. Airborne Coarse Particles and Mortality; *Inhal. Toxicol.* **2000**, *12,* 61-72.
6. Bahadori, T.; Suh, H.H.; Koutrakis, P. Personal Exposure to Particulate Matter of Individuals with Chronic Obstructive Pulmonary Disease (COPD); *Env. Health Perspectives,* submitted for publication, 1998.
7. Rojas, B.L.; Suh, H.H.; Koutrakis, P. Relationships among Personal, Indoor, and Outdoor Fine and Coarse Particle Concentrations for Individuals with COPD; *J. Expo. Anal. Environ. Epidemiol.* **2000**, *10* (3), 294-306.
8. Sarnat, J.A.; Koutrakis, P.; Suh, H.H. Assessing the Relationship between Personal Particulate and Gaseous Exposures of Senior Citizens Living in Baltimore, MD; *J. Air & Waste Manage. Assoc.* **2000**, *50* (7), 1184-98.

9. Janssen, N.H.; Hoek, G.; Brunekreef, B.; Harssema, H.; Mensink, I.; Zuidhof, A. Personal Sampling of Particles in Adults: Relation among Personal, Indoor, and Outdoor Air Concentrations; *Amer. J. Epidemiol.* **1998,** *147,* 537-547.
10. Marple, V.A.; Rubow, K.L.; Olson, B.A. Diesel Exhaust/Mine Dust Virtual Impactor Personal Aerosol Sampler: Design, Calibration, and Field Evaluation; *Aerosol Sci. Technol.* **1995,** *22,* 140-150.
11. Koutrakis, P.; Fasano, A.M.; Slater, J.L.; Spengler, J.D.; McCarthy, J.F.; Leaderer, B.P. Design of a Personal Annular Denuder Sampler to Measure Atmospheric Aerosols and Gases; *Atmos. Environ.* **1989,** *23,* 2763-2773.
12. Demokritou, P.; Kavouras, I.G.; Ferguson S.; Harrison D.; Koutrakis, P. Development and Experimental Evaluation of a Personal Environmental Monitoring System for Simultaneous Measurements of Particulate Matter and Criteria Gases; *Aerosol Sci. Technol.* **2001,** *35,* 741-752.
13. Hinds, W.C. *Aerosol Technology,* second ed.; John Wiley & Sons Inc.: New York, 1999.
14. Berner, A.; Lurzer, C.; Pohl, F.; Preining, O.; Wagner, P. The Size Distribution of the Urban Aerosol in Vienna; *Science of Total Environment* **1979,** *13,* 245-261.
15. Vanderpool, R.W.; Lundgren, D.A.; Marple, V.A.; Rubow, K.L. Cocalibration of Four Large-Particle Impactors; *Aerosol Sci. Technol.* **1987,** *7,* 177-185.
16. Marple, V.A.; Rubow, K.L.; Behm, S.M. Microorifice Uniform Deposit Impactor (MOUDI)—Description, Calibration, and Use; *Aerosol Sci. Technol.* **1991,** *14,* 434-446.
17. Sehmel, G.A. Particle Resuspension: A Review; *Environ. Int.* **1980,** *4,* 107-127.
18. Wall, S.; John, W.; Wang, H.C.; Coren, S.L. Measurement of Kinetic Energy Loss for Particles Impaction Surfaces; *Aerosol Sci. Technol.* **1990,** *12,* 926-946.
19. John, W.; Fritter, D.N.; Winklmayr, W. Resuspension Induced by Impacting Particles; *J. Aerosol Sci.* **1991,** *22,* 723-736.
20. John, W.; Sethi, V. Breakup of Latex Doublets by Impaction; *Aerosol Sci. Technol.* **1993,** *19,* 57-68.
21. Demokritou, P.; Kavouras, I.G.; Harrison, D.; Ferguson, S.T.; Koutrakis, P. Development and Performance Evaluation of a Sampler for the Chemical Composition Analysis of $PM_{2.5}$; *J. Air & Waste Manage. Assoc.* **2001,** *51,* 514-523.
22. Kavouras, I.G.; Koutrakis, P. Use of Polyurethane Foam as Impaction Substrate/Collection Medium in Conventional Inertial Impactors; *Aerosol Sci. Technol.* **2001,** *34,* 46-56.
23. Demokritou, P.; Kavouras, I.G.; Ferguson, S.T.; Koutrakis, P. Development of a High-Volume Cascade Impactor Utilizing Porous Foam as Collection Medium for Toxicological and Chemical Characterization Studies; *Aerosol Sci. Technol.* **2002**, *36*, 925-933.
24. Kavouras, I.G.; Ferguson, S.T.; Wolfson, J.M.; Koutrakis P. Development and Validation of a High-Volume Low Cut-Off Inertial Impactor (HVLI); *Inhal. Toxicol.* **2000,** *12,* 35-50.
25. Marple, V.A.; Rubow, K.L.; Olson, B.A. Inertial, Gravitational, Centrifugal, and Thermal Collection Techniques. In *Aerosol Measurement;* Willeke, K., Baron, P.A., Eds.; Van Nostrand Reinhold: New York, 1993; pp 106-232.
26. Salonen, R.O.; Pennanen, A.S.; Halinen, A.I.; Hirvonen, M-R.; Sillanpaa, M.; Hillamo, R.; Karlsson, V.; Koskentalo, T.; Aarnio, P.; Ferguson, S.T.; Koutrakis, P. A Chemical and Toxicological Comparison of Urban Air PM_{10} Collected during Winter and Spring in Finland; *Inhal. Toxicol.* **2000,** *12,* 95-104.
27. Chang, M.; Sioutas, C.; Cassee, F.R.; Fokkens, P.H.B. A Mobile High-Capacity Particle Size Classifier (HCPSC) for Separate Collection of Coarse, Fine, and Ultrafine Particles; *J. Aerosol Sci.,* in press.

About the Authors

Dr. Philip Demokritou (corresponding author; e-mail: pdemokri@hsph.harvard.edu) is an instructor of Environmental Science in the Environmental Science & Engineering Program at Harvard University, School of Public Health, Boston, MA. Tarun Gupta is a doctoral student and Stephen Ferguson is an engineer in the Environmental Science & Engineering Program at Harvard University, School of Public Health. Dr. Petros Koutrakis is a professor of Environmental Science at the Harvard School of Public Health.