Aerosol Science and Technology

ISSN: 0278-6826 (Print) 1521-7388 (Online) Journal homepage: http://www.tandfonline.com/loi/uast20

Continuous Measurements of Ambient Particle Deposition in Human Subjects

Lupita Montoya , Joy Lawrence , G. Krishna Murthy , Jeremy Sarnat , John Godleski & Petros Koutrakis

To cite this article: Lupita Montoya , Joy Lawrence , G. Krishna Murthy , Jeremy Sarnat , John Godleski & Petros Koutrakis (2004) Continuous Measurements of Ambient Particle Deposition in Human Subjects, Aerosol Science and Technology, 38:10, 980-990, DOI: 10.1080/027868290519049

To link to this article: http://dx.doi.org/10.1080/027868290519049

Published online: 04 Mar 2011.

Submit your article to this journal

Article views: 132

View related articles

Citing articles: 18 View citing articles

Full Terms & Conditions of access and use can be found at
http://www.tandfonline.com/action/journalInformation?journalCode=uast20

Download by: [University of North Texas] **Date:** 06 January 2017, At: 22:04

Aerosol Science and Technology, 38:980–990, 2004
Copyright © American Association for Aerosol Research
ISSN: 0278-6826 print / 1521-7388 online
DOI: 10.1080/027868290519049

Continuous Measurements of Ambient Particle Deposition in Human Subjects

Lupita D. Montoya,[1] Joy Lawrence,[2] G. G. Krishna Murthy,[2] Jeremy A. Sarnat,[2] John J. Godleski,[2] and Petros Koutrakis[2]
[1]*Civil and Environmental Engineering Department, Rensselaer Polytechnic Institute, Troy, New York*
[2]*Environmental Health Department, Harvard School of Public Health, Boston, Massachusetts*

The total deposition fraction (TDF) of fine and ultrafine aerosols was measured in a group of six healthy adults exposed to polydisperse ambient aerosols in Boston. Fifteen repeated inhalation–exhalation cycles were conducted during a given exposure session. Deposition efficiency for particles with aerodynamic diameter ranging from 63.5 to 2045 nm was determined using the average concentration of inhaled and exhaled particles measured during these cycles. Deposition efficiencies ranged from 7.3 ± 18.7% (240–275 nm) to 98.6 ± 28.1% (1545–2045 nm). Subjects exhibited similar deposition patterns with minimum efficiencies between 200–400 nm. Results from ANOVA and mixed-model regression analyses showed significant differences ($p < 0.05$) in particle deposition efficiency by particle size as well as among the subjects. Deposition efficiencies varied most among the subjects for particles between 100 and 1000 nm in size. A comparison with the ICRP model showed good agreement, with best agreement for male subjects and particle sizes <400 nm.

INTRODUCTION

Epidemiological studies have shown that exposure to ambient particulate matter is associated to increases in mortality and morbidity (Dockery et al. 1993; Schwartz et al. 1996; Norris et al. 1999; Samet et al. 2000; Peters et al. 2000; Dab et al. 2001). Measurement of particle respiratory deposition is critical to our efforts to investigate observed health effects. To date, most experimental studies of particle deposition in the human respiratory tract have used synthetic aerosols. These are often monodisperse, usually chemically uniform, and nontoxic. Early studies using such aerosols under normal breathing conditions and mouthpiece inhalation produced deposition values of about 18% for 0.4 μm particles (reviewed by Lippmann 1977). With controlled breathing, deposition was reported to be 10–12% for particle sizes from 0.2 to 1 μm (Heyder et al. 1973). A subsequent study (Heyder et al. 1986), also using controlled breathing and a tidal volume of 1000 cm^3, reported deposition efficiency of 27–99% for particle sizes from 0.005 to 8 μm. The only few studies of real-world particles are those of tobacco smoke particles. A summary of previous studies (Hinds et al. 1983) on cigarette smoke deposition using unnatural breathing conditions showed considerably higher deposition efficiencies (70–100%) for mainstream cigarette smoke than those reported for environmental tobacco smoke (ETS). For nose breathing, ETS was found to have a deposition efficiency of 59 ± 10% (Strong et al. 1994), and 56.0 ± 15.9% for particles of a count median diameter of 0.2 μm and geometric standard deviation of 1.7 (Morawska et al. 1999). To date, no experimental data have been reported for polydisperse ambient air particles.

Many ambient particle deposition estimates are based on theoretical studies, which may not be accurate (ICRP 1994; Asgharian et al. 2001). For instance, for ETS, model predictions (15.7–17.9%) are considerably lower than those reported by experimental studies (Hofmann et al. 2001). In an effort to examine the deposition of real ambient particles in humans and to compare it to deposition models, we conducted an experimental deposition study using Boston air. Deposition of polydisperse ambient particles of aerodynamic diameter ranging from 63.5 to 2045 nm were measured under normal (not scripted) nose-breathing conditions in six healthy individuals (two females and four males). Normal breathing in this context refers to rest instead of under normal light or heavy exercise where mouth breathing can become prominent. In order to evaluate losses in the system, testing was conducted prior to the exposure sessions using similar ambient particles.

Received 14 March 2003; accepted 5 August 2004.
This work was supported by U.S. EPA Research Award R827353 (Harvard-EPA Center for Particulate Air Pollution Research), NIH training grant # T32 HL07118, and the Yerby Postdoctoral Fellowship Program from Harvard School of Public Health, Division of Public Practice.
Address correspondence to Lupita D. Montoya, Civil and Environmental Engineering Department, Rensselaer Polytechnic Institute, 110 8th Street, MRC 315, Troy, NY 12180, USA. E-mail: lmontoya@rpi.edu

Table 1
Subject physical characteristics

Subject	Age (years)	Gender	Height (m)	Weight (kg)
A	23	m	1.85	86.2
B	58	m	1.88	106.6
C	21	f	1.63	68.0
D	25	m	1.78	77.1
E	28	m	1.68	65.8
F	31	f	1.70	72.6

EXPERIMENTAL METHODS

Subjects

We conducted a human experimental exposure study in six healthy nonsmoker volunteers. The physical characteristics of these volunteers are presented in Table 1. The study was explained to each subject and all questions were answered prior to signing the consent form approved by the Harvard School of Public Health Human Subjects Committee.

Subjects with an upper or lower respiratory tract infection were not studied until the acute event was resolved and at least three weeks had elapsed. For six hours prior to the exposure session, subjects did not have caffeinated medications or beverages and were instructed not to engage in moderate to heavy physical exertion at least four hours prior to the exposure session. Exposure sessions were scheduled for morning or afternoon, each lasting approximately 3 h. Two subjects participated in two (one morning and one afternoon with at least two days between sessions) exposure sessions, and four subjects participated in only one session.

During the exposure session, subjects wore a nose-mask and breathed only through the nose for the duration of the session (Figure 1). The subjects were seated comfortably and allowed to move freely but were asked to minimize conversation and encouraged to verbally communicate only as needed. Subjects read, used a portable music system with headphones, or slept during the sessions. A modified BUXCO system (BUXCO Electronics Inc, Troy, NY, USA) was used to derive the respiratory parameters (Godleski et al. 2000) from each subject during the exposure session. The pressure transducer of the BUXCO system was attached directly to the nose mask, between the mask and the pair of one-way valves isolating inhalation from exhalation.

The intake for the exposure line was located in the premises of the Harvard School of Public Health and brought in ambient air with polydisperse Boston particles. This ambient air was inhaled/sampled 1 m from the building, directly above the main air intake of the building's Heating, Ventilation, and Air Conditioning (HVAC) system. There are no known particle sources active immediately near the air intake; Huntington Avenue is approximately 75 m distant. Figure 2 shows the average particle lognormal size distribution measured during the morning exposure session of subject C. The average distribution was calculated for the 14 ambient measurements and it is presented here including the upper and lower values (± one standard deviation). Table 2 shows the average values for each exposure session, including the total number concentration, the geometric mean diameter (GMD), and the geometric standard deviation (GSD).

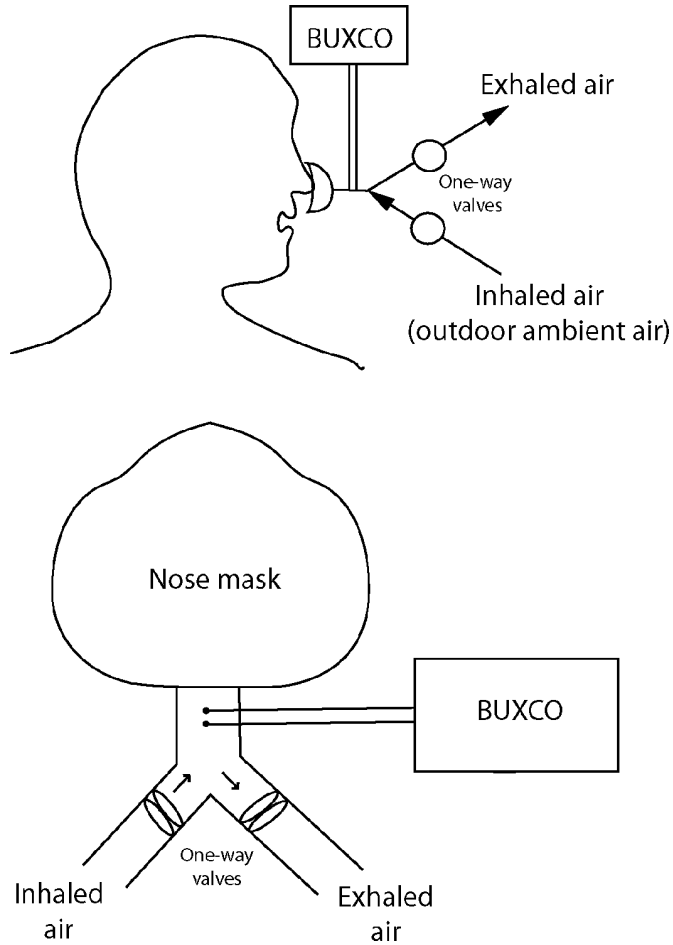

Figure 1. Diagram of respiration setup.

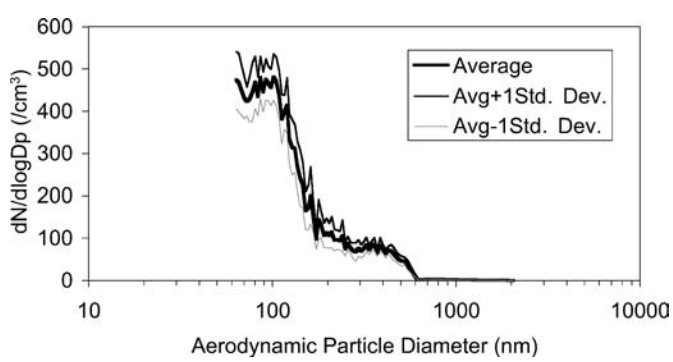

Figure 2. Lognormal size distribution of average ambient aerosols for morning session of subject C.

Table 2
Physical characteristics of ambient aerosols

Subject	Session	Number conc. (#/cm^3)	Geometric mean diam. (nm)	Geometric standard deviation
A	Afternoon	317.6	106.0	1.73
B	Morning	267.1	133.1	1.81
C	Morning	205.2	120.2	1.78
	Afternoon	376.8	125.8	1.79
D	Morning	435.0	124.9	1.79
	Afternoon	133.1	184.7	1.94
E	Afternoon	206.0	152.1	1.86
F	Afternoon	245.0	119.9	1.78

Experimental Setup

The experimental apparatus utilized in this study made it possible to conduct continuous particle concentration measurement during inhalation/exhalation cycles of human subjects. The ambient particle counts for the different sizes were measured concurrently by an Aerosizer (model LD, TSI/Amherst Process Instruments Inc., St. Paul, MN, USA) and a scanning mobility particle sizer (SMPS, Model 3934). The SMPS was comprised of an electrostatic classifier (model 3071A, TSI Inc., St. Paul, MN, USA) and a condensation particle counter (CPC, model 3010, TSI Inc., St. Paul, MN, USA). The SMPS measured particle electrical mobility diameters in the range of 40–400 nm, while the Aerosizer measured particle aerodynamic diameters in the range 600–2045 nm.

Figure 3 shows the main components of the experimental apparatus. During the "inhalation" periods (right side of diagram), particle concentrations in the ambient air were measured using the SMPS (at a flow rate of 0.3 lpm) and the Aerosizer (at a flow rate of 2.5 lpm), and they were used as a metric to determine average concentrations inhaled. Outdoor ambient air was passed through a diffusion drier to remove particle-bound water before reaching the SMPS and aerosol particle sizer (APS). In order to evaluate whether there was a concentration bias due to the splitting of the flow, the data from the overlapping size range between the two instruments were analyzed. It was found that the measurements from the two instruments did not show a clear bias since the discrepancies were not systematic. To minimize any discrepancies further, the overlapping region was eliminated from the data presented here. The ambient particle concentrations measured were later used to calculate the number of inhaled

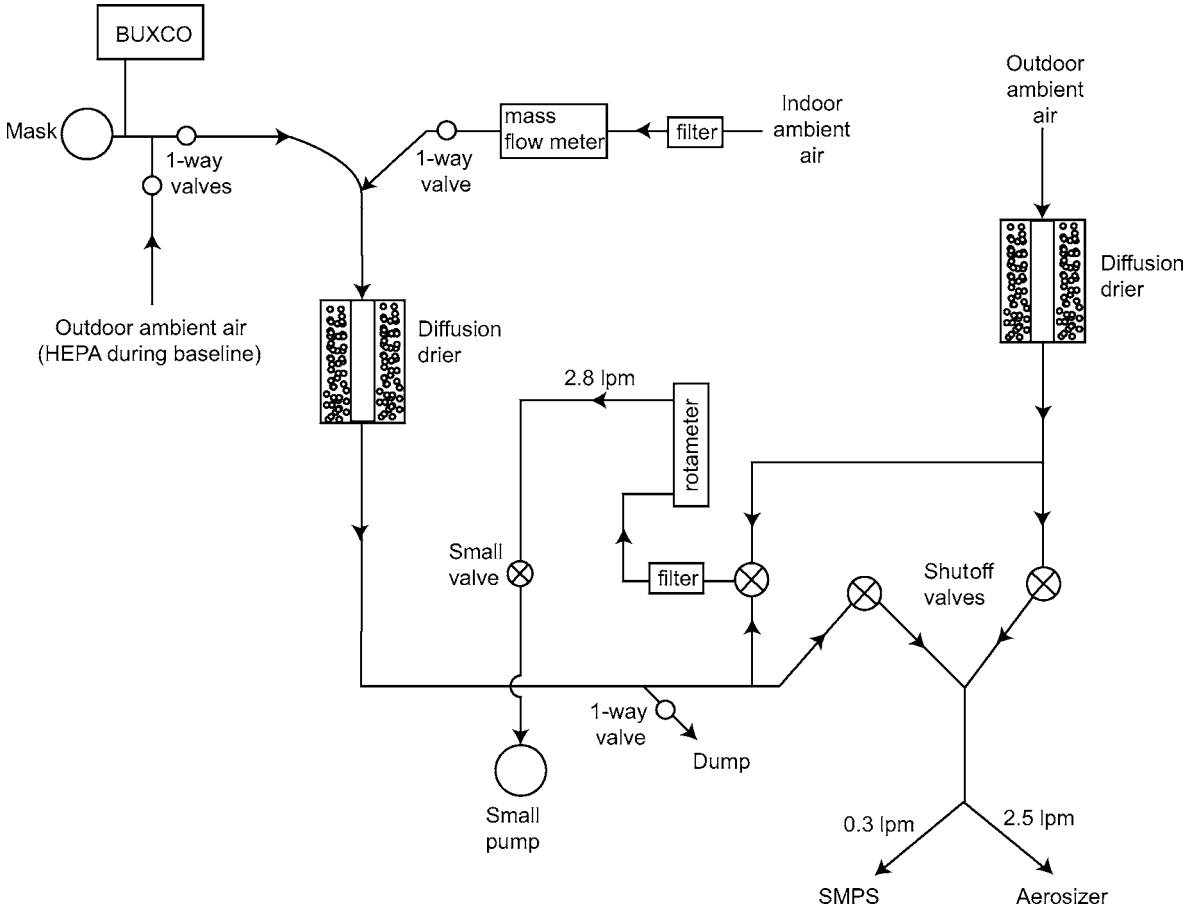

Figure 3. Experimental apparatus.

particles (P^{inh}) by accounting for the tidal volume measured in each inhalation cycle.

During the "exhalation" periods (left side of the diagram), the process was more complex. Incoming ambient outdoor air was directed to the subject via a one-way valve and through a mask. Once this air was breathed in, the corresponding exhaled air was then passed through another one-way valve and mixed with new, indoor filtered air to compensate for the variation in breathing volumes and to make up the required 2.8 lpm sampling flow rate for this system. The makeup flow was measured by a mass flow meter (Model FMA 5609, Omega Engineering Inc., Stamford, CT, USA) and recorded by a BT Data Logger. Exhaled air was then passed through a diffusion drier so that any particle-bound water acquired during inhalation was eliminated. This step allowed for a direct comparison of the exhaled and ambient counts. Since the exhalation flow rates could not be controlled, a one-way valve was installed before a dump designed to eliminate any flow in excess of the 2.8 lpm required by the SMPS and Aerosizer. These exhaled particle concentrations were later used to calculate the number of exhaled particles (P^{exh}) by accounting for the respiratory parameters measured in each exhalation cycle. To prevent flow from stopping, a bypass system was included right after the dump. The bypass was designed to allow the exhalation flow path to continue while ambient measurements were made. Similarly, the ambient (inhalation) flow path was kept active while exhalation measurements were being made. This bypass included a filter and a rotameter connected to a small pump; flow was measured to balance the sampling flow rate.

Respiratory Parameters

Breathing parameter measurements were analyzed using the BUXCO software package and used to derive the respiratory parameters (BUXCO Electronics Inc., Troy, NY, USA). Respiratory parameters were measured continuously for each human subject during the experiment by measuring airflow while the subject was breathing through a nasal mask (Figure 1). Flow measurements were made by incorporating a slight restriction at the inlet of the nasal mask (Gazula and Godleski 2001). As previously described (Godleski et al. 2000), this was done to assure that measurements would not interfere with the subject's breathing and that no modifications to the nasal mask were required (Respironics nasal mask). The device is compact and comfortable for the subjects, provides measurements independent of the subject's position (i.e., the subject may be seated), and is inert so that no reactions between particles and gases and the system surfaces occur. A slight restriction in the lumen of the tube creates a pressure differential that varies with respiratory volume flow rates, i.e., the subject's respiration creates pressure fluctuations. The human subject respiratory parameters can then be determined from the inhalation and exhalation volume flow rates through the nasal mask, which is fitted to a Y-connector with in and out valves for the inhaled and exhaled air, respectively. A pair of breathing tubes was connected to the Y-connector.

The definitions of the breathing parameters are schematically shown in Figure 4 (reprinted with permission from Godleski et al. 2000). The beginning of inspiration and expiration were defined as the times when the differential pressure curve crossed zero. The parameters reported here are tidal volume (V_T) and minute ventilation ($\dot{V}_E$). Other parameters were derived from these basic parameters, including: inspiratory duty cycle, IDC ($T_I/T_I + T_E$), and inspiratory ventilatory drive, IVD (V_T/V_I). These parameters are useful measures of changes in the spontaneous breathing patterns in humans. Average values for tidal volume, minute volume, and volume of filtered air are given in

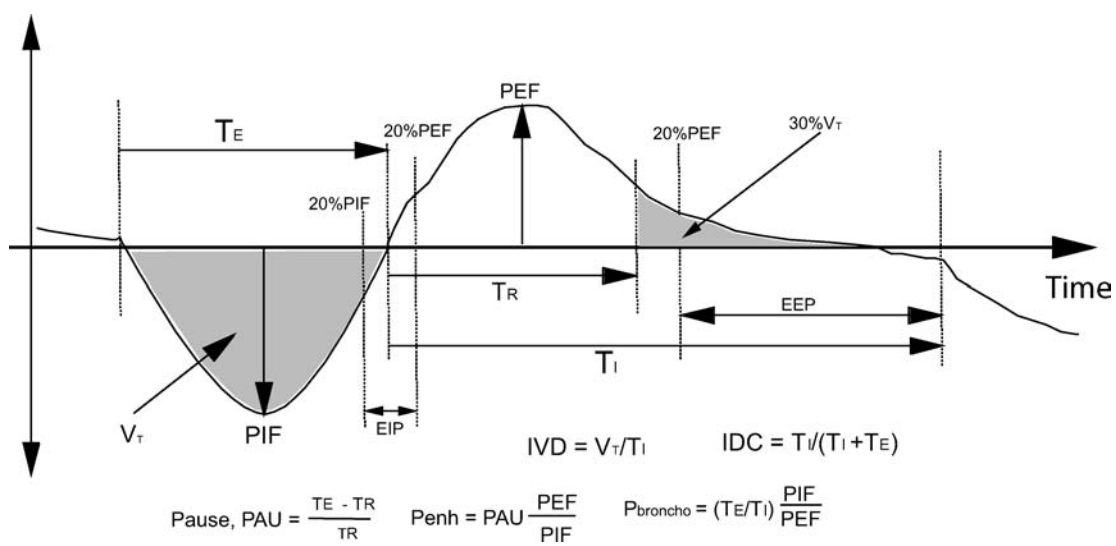

Figure 4. Schematic of a breath and definition of respiratory parameters (adapted from Hamelmann et al. 1997 and Godleski et al. 2000).

Table 3
Subject average respiratory parameters

Subject	Session	Number of cycles	Tidal volume (ml)	Minute volume (ml/min)	Vol. filtered air (ml)
A	Afternoon	14	1304.0	11940.8	2542.8
B	Morning	14	1578.0	11016.3	2727.6
C	Morning	14	901.2	9818.4	2231.3
	Afternoon	14	859.4	11085.9	2253.6
D	Morning	12	715.4	10145.9	2555.3
	Afternoon	14	1177.0	14698.9	2244.9
E	Afternoon	14	825.8	13579.9	3573.6
F	Afternoon	14	1141.5	10097.7	2334.0

Table 3. These values are slightly higher than those normally reported. This may be due to the fact that the reported values are averaged over a larger number of individuals (ICRP 1994). In addition, reported values from other studies correspond to prescribed breathing patterns (e.g., Strong et al. 1994; Heyder et al. 1973, 1986). Other possible explanations include the Hawthorne Effect (a distortion of research results caused by the response of subjects to the special attention they receive from researchers) as well as intersubject variability. In comparison to reference values for a general Caucasian population, the values presented here correspond to activity levels between sitting awake and light exercise (ICRP 1994).

Inhalation Procedure

Each exposure session consisted of five consecutive segments:

1. **Baseline:** A 20–25 min period of baseline respiratory measurements, during which the subject inhaled filtered air. This was outdoor air which was passed through a High Efficiency Particulate Air (HEPA) filter (Millipore Opticap Filter, Millipore, Bedford, MA, USA). No particle measurements were made during this period.
2. **Background period:** Five measurements of exhaled particle size distribution while subject inhaled filtered air. This allowed correction for deposition of particles produced by the subject during normal respiration.
3. **Inhaled/exhaled measurements:** Fifteen pairs of ambient/exhaled particle size distributions. Subject's inhaled-air line was detached from the HEPA filter and connected to a port through the lab window. Particle count size distribution measurements were made alternately on ambient air and exhaled air, 150 s on each channel, totalling 5 min per cycle.
4. **A clearance period:** Five measurements of exhaled particle size distribution while subject again breathed filtered air. By the end of this period, the subject's exhaled particle size distribution returned to the background level.
5. **A postexposure baseline period:** Approximately 20 min of respiratory measurements, during which the subject inhaled filtered air, to verify no changes to subject's respiration occurred as a result of exposure.

The total length of each exposure session was about 150 min; however, only the third segment (about 85 minutes) involved breathing of ambient particles. The rest of the segments involved breathing filtered air.

Only two exposure sessions were conducted per day, with about 2 h breaks between sessions, during which all the tubing between the mask and the drier as well as the desiccant in the drier were changed. The drier was placed after the one-way valves connected to the mouthpiece at a distance that allowed access of the subjects to the system and minimized loss of particles in the system. The total length (about 6 ft) from the window to the diffusion drier on the ambient line was the same as the total distance from the window through the mask and to the drier on the exhalation line. The distance from the mouthpiece to the drier was about 2 ft. This protocol was expected to prevent any excessive condensation buildup in the system that would affect the growth and potential system deposition rates of hygroscopic aerosols prior to the drier. A separate experiment looking at the relative humidity (RH) levels before and after the diffusion drier showed that the RH after the drier was consistently under 15%. It was decided in advance to discard individual exhalation measurements within a session if the subject talked for more than 15 s, yawned (open mouth inhalation) excessively, reported leakages at the nose mask, stood during the measurement, or removed/readjusted the nose mask during the measurement.

The third segment of the exposure session (inhaled/exhaled measurements) began with measurement of ambient air. During the first ambient measurement, the subject's inhalation line was disconnected from the HEPA filter and connected to a manifold running through the lab window. The subject was not informed when the switch from filtered to ambient air occurred, but it is likely that the difference was sensed. Following the initial measurement of ambient air, the sampling line to the exhaled air channel was opened, the sampling line to ambient air closed, and the exhaled air was measured. As previously described, bypass flow through the inactive sampling channel was maintained to prevent air from stagnating in the inactive channel. This also reduced the possibility that the subject might be able to distinguish exhaled air sampling intervals from ambient air sampling intervals. At the conclusion of the 15 pairs of ambient and exhaled air measurements, the subject's inhalation line was disconnected from the ambient air manifold and reconnected to the HEPA filter. Again, the subject was not informed when the switch occurred, but it is likely that the change was sensed. Immediately upon connection of the inhalation line to the filter, exhaled air sampling was commenced. Five successive measurements of exhaled air were made to establish this clearance period. An additional 20 min of (BUXCO) respiratory measurements completed the exposure session. Since breathing patterns have a substantial effect on deposition, especially for particles with significant diffusivity or inertia, breathing parameters (rate and volume) were analyzed to determine the

intra- and intersubject variability. These values were also considered when selecting the parameters used for a comparison with the International Commission on Radiological Protection (ICRP).

Data Analysis

Since the experimental setup included only one SMPS and one Aerosizer, it was not possible to make concurrent ambient (inhalation) and exhalation measurements. The particle measurements taken from the incoming ambient air represented the ambient particles for a 2.5 min period. In order to estimate the ambient particle concentration during an exhalation period, the 2.5 min ambient measurements before and after that exhalation period were used to calculate an average concentration. These averages represented the estimated ambient particle concentrations in the incoming air while exhalation measurements were taken. This approach was considered appropriate since the average difference between consecutive ambient measurements was on the order of 20%. This averaging approach, however, eliminated the last (15th) ambient measurement from our data set; as a result, all subsequent calculations were based on 14 inhalation/exhalation cycles. Once the particle data were collected by the SMPS and Aerosizer, only the size bins that contained 10 or more particle counts were used. As expected, as the particle size increased, the counts decreased. Consequently, the data were truncated at 400 nm (mobility equivalent diameter) for the SMPS and at 2045 nm (aerodynamic diameter) for the Aerosizer. This step allowed us to minimize errors associated with small particle counts.

Since the SMPS and the Aerosizer measure two different particle diameter types, an adjustment was necessary. The electrical mobility diameters measured by the SMPS were converted to aerodynamic diameters using the following relationship:

$$\sqrt{C_{ae}}D_{ae} = \sqrt{\frac{C_{VE}\rho_p}{\chi\rho_0}}D_{VE} \qquad [1]$$

where D_{ae} is aerodynamic diameter, D_{VE} is volume equivalent diameter, C_{ae} is slip correction factor for aerodynamic diameter, C_{VE} is slip correction factor for volume equivalent diameter, ρ_p is particle density (in g/cm^3), and χ is dynamic shape factor (Peters et al. 1993). For the ambient particles used in this study, ρ_p was assumed to be 1.7 g/cm^3 (Babich et al. 2000), χ was assumed to be 1.0, and the mobility equivalent diameter measured by the SMPS was assumed to equal D_{VE}. Aerodynamic diameters from both instruments were then used for all subsequent calculations.

The ambient particle counts, $N_{i,j}^{inh}$, were used to calculate the number of particles inhaled in a breath, $P_{i,j}^{inh}$, in size bin i, by accounting for the breathing parameters measured for a given individual during the specific exposure cycle j:

$$ParticlesInhaled = P_{i,j}^{inh} = \frac{V_j^t}{V_j^{sam}} \times N_{i,j}^{inh} \qquad [2]$$

where V_j^t is the average tidal volume measured during cycle j (ml), V_j^{sam} is the volume of air sampled during cycle j (ml), and $N_{i,j}^{inh}$ is the ambient particle counts of size range i (based on the average of two consecutive measurements) for cycle j.

Similarly, the measurements made during the exhalation period (also 2.5 min long) were then used to calculate the number of particles exhaled in an average breath in each size range i, $P_{i,j}^{exh}$, using the following formulae:

$$ParticleExhaled = P_{i,j}^{exh} = \frac{V_j^t}{V_j^{sam}}\left(N_{i,j}^{exh} - N_i^{sham}\right)X_j \qquad [3]$$

and

$$X_j = \frac{MV_j + MV_j^{FA}}{MV_j}, \qquad [4]$$

where $N_{i,j}^{exh}$ is the particle counts in size range i measured during the exhalation cycle j; N_i^{sham} is the filtered air baseline for size range i; MV_j is the minute volume for cycle j (ml/min); and MV_j^{FA} is the minute volume of filtered air for cycle j (ml/min). The factor X_j was included to account for the filtered air that was introduced in the system during the exhalation step.

Since the total number of useful size bins from the SMPS and the aerosizer was large (65 and 27, respectively), new particle size ranges were created by uniformly combining 5 discrete bins at a time. The purpose of this step was to smooth our data and further reduce the error associated with small counts. Once these new size ranges were generated, average number of particles in a breath for each new size range was calculated for both inhaled and exhaled data ($\bar{P}_i^{inh}$ and $\bar{P}_i^{exh}$) by including all the corresponding inhalation or exhalation cycles:

$$\bar{P}_i^{inh} = \frac{\sum_{j=1}^{n} P_{i,j}^{inh}}{n}. \qquad [5]$$

and

$$\bar{P}_i^{exh} = \frac{\sum_{j=1}^{n} P_{i,j}^{exh}}{n}. \qquad [6]$$

These average values were then used to calculate the deposition efficiency for a given size range and a given subject:

$$DepositionEfficiency = \eta_i = \frac{\bar{P}_i^{inh} - \bar{P}_i^{exh}}{\bar{P}_i^{inh}}. \qquad [7]$$

Mixed model regression analysis was then used to determine the differences in deposition efficiency by subject and by size. Mixed models were necessary in order to pool information across individuals while accounting for repeated measures on the same individual. Correlations between observations over time were modeled using an autoregressive covariance (AR1) structure, which yielded the lowest Akaike Information Criteria (AIC) value (Diggle et al. 2002). *Deposition efficiency* was

modeled as a dependent variable; *subject* and *size* were modeled as fixed variables. Significance is reported at the 0.05 level. All analyses were conducted using the SAS system (SAS Institute, Cary, NC).

RESULTS AND DISCUSSION

An evaluation of the particle losses in the system was conducted prior to the start of the exposure study. The most serious losses were expected to take place in the drying apparatus; therefore, evaluation was done by alternating measurements upstream and downstream of one drying system and two drying systems in series. This allowed comparison of dry aerosols. Measurements were taken after the first drier and after the second drier and used to calculate particle penetration and losses. For particle sizes reported in this study and using a similar protocol of combining size bins to collapse the data, it was found that the average particle penetration was 97% for the sizes measured by the SMPS and 99% for those measured by the Aerosizer. The results of this evaluation, therefore, showed very little losses in the size ranges finally used in this study. The largest losses were found in the size ranges above 2 μm, which were not used here.

To illustrate the progression of the data analysis, results presented here are for the morning exposure session of (female) subject C. Similar analyses were performed for each subject. Figures 5a and b show the average inhaled particle counts per session, $P_{i,j}^{inh}$, and the standard deviations for subject C measured during the morning session by the SMPS and Aerosizer, respectively. The error bars represent the standard deviations calculated with the averaging of the 14 inhalation cycles. As expected, particle counts inhaled increased with decreasing particle size, reaching a maximum count of about 30,000 at around 95 nm (aerodynamic diameter). Figures 6a and b show the average exhaled particle values, $P_{i,j}^{exh}$, for subject C measured during the morning session by the SMPS and the Aerosizer, respectively. The maximum number concentration of exhaled particles was about 23,000, also corresponding to the 95 nm particles. Similar graphs were generated for each exposure session; however, only subject C (morning session) data are included as representative of all sessions.

Using Equations (3) and (4), the $P_{i,j}^{exh}$ values were corrected to account for the filtered air baseline measured for each subject during his or her exposure session. Ambient/inhalation and exhalation apparatus were identical to minimize potential particle loss differences between the two systems. Note that the apparatus schematic is not to scale (Figure 3). The losses on the tubing, therefore, were assumed to be similar on both sides. Losses to the system were evaluated by measuring the particle count difference in the entrance and exit of the diffusion drier. These differences were found to be much smaller than the variability in particle concentrations of the ambient air. A more thorough evaluation of these losses could be performed using more stable particle concentrations to avoid the variability of ambient concentrations.

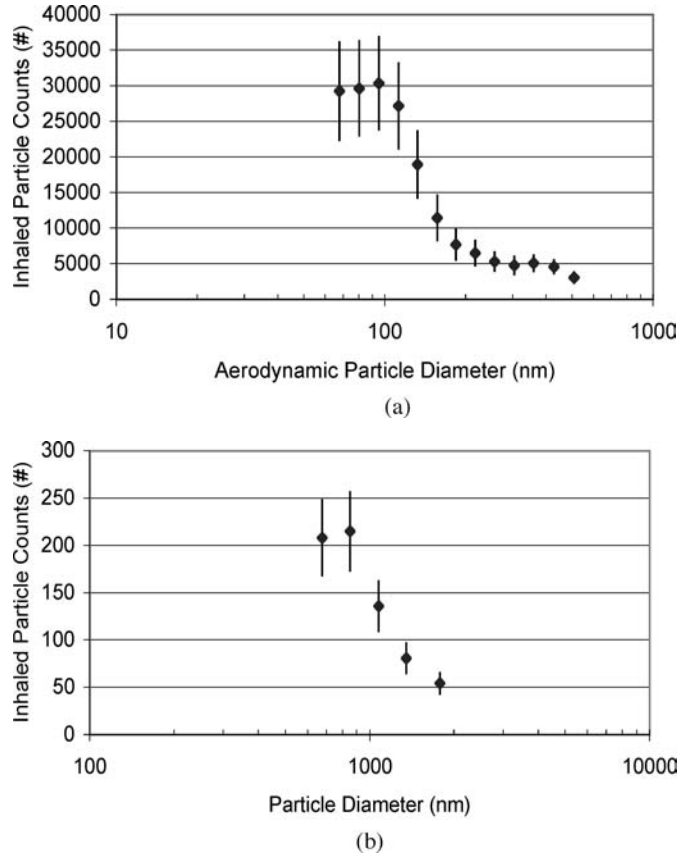

Figure 5. (a) Average inhaled particle values, P^{inh}, measured for subject C (63.5–542.7 nm, morning session). (b) Average inhaled particle values, P^{inh}, measured for subject C (600–2045 nm, morning session).

Figure 7 shows the ambient particle deposition efficiencies for aerodynamic diameters 63.5–2045 nm for subject C during the morning exposure session. The error bars were determined using the standard deviation of the inhalation and exhalation measurements in Equation (7). The minimum deposition efficiency measured by the SMPS was 13.4% corresponding to the size range 173–197 nm, while the maximum was 35.0% for the range 63.5–72.6 nm. For the Aerosizer data, the minimum efficiency (48.2%) was measured in the size range 617–741 nm and the maximum (98.4%) was measured in the range 1545–2045 nm. A recent stochastic lung deposition model (Salma et al. 2002) used to compute total deposition in the respiratory system for a Caucasian male during sitting ($V_T = 750$ ml) and light exercise ($V_T = 1250$ ml) activities found the minimums to be about 17% occurring at about 450 and 350 nm, respectively. A similar pattern of the minimum efficiency occurring at decreasing D_p with increasing activity level (as determined by higher respiratory parameters) was reported for female subjects. At 40 nm (aerodynamic diameter), the deposition efficiency was estimated at 50% for these two activity levels. This value agrees well with the average deposition efficiency of 46% found by our study for

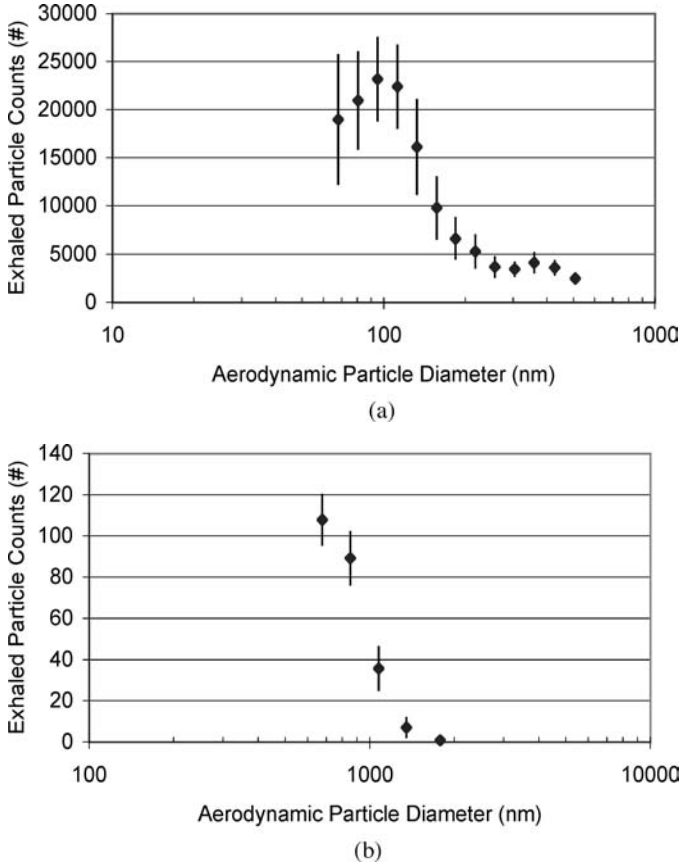

Figure 6. (a) Average exhaled particle values, P^{exh}, measured for subject C (63.5–542.7 nm, morning session). (b) Average exhaled particle values, P^{exh}, measured for subject C (600–2045 nm, morning session).

particles 63.5–72.6 nm. An experimental study of environmental tobacco smoke deposition (100–600 nm) was conducted for 15 nonsmokers with spontaneous nasal breathing, and it showed a uniform particle deposition with an average value of 56.0 ± 15.9% (Morawska et al. 1999). This efficiency is higher than that found by our study, 24.2 ± 11.7% for 98.2–400 nm (SMPS data only). Another study (Strong et al. 1994) using prescribed breathing patterns by 9 nonsmoker male subjects found a deposition efficiency of 59 ± 10% for nasal breathing of aerosol with an activity median aerodynamic diameter (AMAD) of 0.21 μm. In contrast, our study found an average deposition efficiency of 19.1 ± 11% for particles of 203.8–232.8 nm aerodynamic diameter. The deposition efficiencies determined by the above experimental studies, including this one, are higher than those previously reported. For example, an experimental study was conducted using monodisperse airborne d-2-ethylhexyl sebacate (DES) droplets in the size range from 0.2 to 1 μm (Heyder et al. 1973). That study found deposition efficiencies of about 10% with no particle size of minimum deposition and no differences in the average deposition of the four subjects studied. A subsequent study by the same research group (Heyder et al. 1986) used monodisperse aerosols of a wider size range (5–1500 nm). That study found minimum depositions of 15% at 200 nm using unit density spheres and 1000 cm^3 tidal volume during nasal breathing. Considering that particles in this study are expected to be hygroscopic, it is possible that they might have grown in the lung as much as two-fold, affecting their deposition efficiency. Once exhaled and passed through the drier, however, the enlarged particles might have reduced to their original size. Additional experiments eliminating the driers could help determine the extent of this effect.

Figure 8 shows the experimentally determined ambient particle deposition efficiencies for all subjects. In general, subjects displayed similar deposition patterns, with minimum deposition efficiency at about 200 nm. As expected from particle deposition theory, results from ANOVA and mixed-model regression analyses showed significant differences ($p < 0.05$) in particle deposition efficiency by particle size (Table 4). Likewise, there were significant differences in mean deposition efficiencies among the subjects. Generally, deposition efficiencies varied most among the subjects for particles between 100 and 1000 nm in size. Differences in deposition efficiency were especially pronounced for one subject (Subject D) who had significantly higher rates of deposition than the other subjects for all particles less than 700 nm in size ($p < 0.0001$). Due to the small sample size of

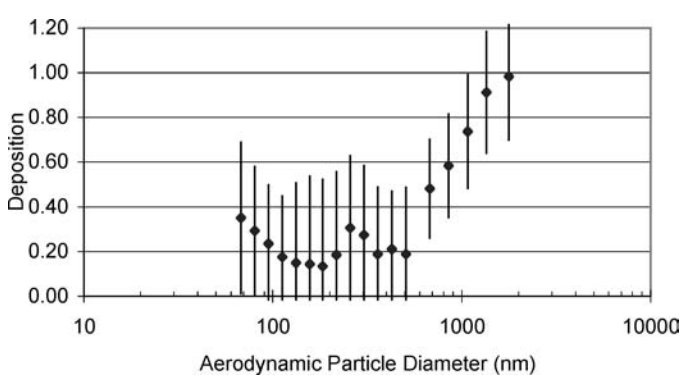

Figure 7. Ambient particle deposition efficiency calculated for subject C (63.5–2045 nm, morning session).

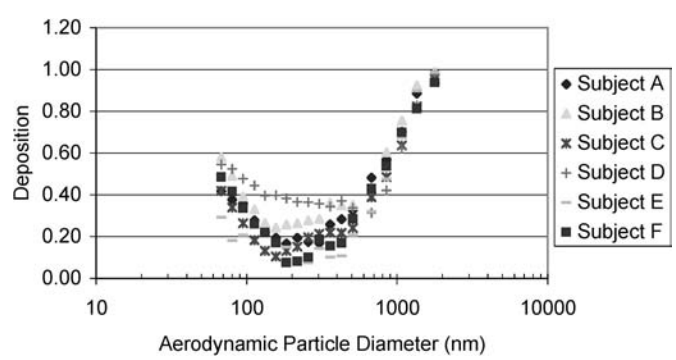

Figure 8. Ambient particle deposition efficiency (63.5–2045 nm) for all subjects.

Table 4
Results of mixed-model regression analyses of mean deposition efficiency by particle size and subject

		d_a (nm)																	
Subject	**Session**	**42.9**	**51.4**	**61.5**	**73.7**	**88.2**	**106**	**126**	**151**	**181**	**217**	**259**	**311**	**372**	**676.5**	**851.5**	**1075**	**1350**	**1780**
A	PM	0.45	0.40	0.37	0.31	0.26	0.22	0.19	0.22	0.19	0.17	0.26	0.27	0.32	0.47	0.56	0.70	0.88	0.99
B	AM	0.55	0.49	0.40	0.33	0.27	0.24	0.26	0.26	0.27	0.28	0.37	0.34	0.35	0.46	0.61	0.75	0.92	0.99
C	AM	0.35	0.29	0.23	0.17	0.15	0.14	0.13	0.17	0.29	0.26	0.18	0.20	0.16	0.46	0.57	0.73	0.91	0.98
C	PM	0.45	0.38	0.30	0.20	0.11	0.07	0.12	0.12	0.13	0.18	0.23	0.21	0.26	0.28	0.40	0.56	0.76	0.94
D	AM	0.52	0.49	0.43	0.42	0.41	0.41	0.44	0.46	0.49	0.45	0.45	0.48	0.42	0.47	0.55	0.65	0.81	0.98
D	PM	0.50	0.45	0.37	0.33	0.30	0.35	0.27	0.22	0.19	0.23	0.23	0.27	0.26	0.14	0.26	0.55	0.79	0.94
E	PM	0.28	0.17	0.20	0.24	0.21	0.16	0.15	0.09	0.07	0.15	0.10	0.11	0.19	0.32	0.48	0.67	0.90	0.99
F	PM	0.47	0.40	0.33	0.26	0.21	0.16	0.10	0.10	0.11	0.19	0.15	0.18	0.29	0.43	0.54	0.70	0.81	0.94
MEAN		**0.45**	**0.38**	**0.33**	**0.28**	**0.24**	**0.22**	**0.21**	**0.21**	**0.22**	**0.24**	**0.25**	**0.26**	**0.28**	**0.38**	**0.50**	**0.66**	**0.85**	**0.97**
CV (%)		20.1	28.2	24.4	28.5	38.5	51.3	54.4	58.6	61.0	41.0	46.6	43.7	29.6	32.3	23.4	11.1	7.2	2.4

[a]Shaded areas indicate deposition efficiencies significantly different from mean deposition efficiency of other subjects using mixed models ($\alpha = 0.05$).
[b]Items in bold indicate significant fixed subject effect using mixed models ($\alpha = 0.05$).

this study, it was not possible to determine accurately whether there were differences in deposition efficiency due to gender; however, based on average values calculated for each gender, there were no significant differences between males and females observed in our study as previously reported (Kim and Hu 1998; Jaques and Kim 2000). The effect of breathing pattern was also investigated in more depth in the study by Jaques and Kim (2000), where they found that for a given breathing pattern the TDF increased as particle size decreased for a narrow size distribution in the ultrafine fraction (0.040–0.10 μm). This was true regardless of breathing pattern used. These results also showed that for a given particle size TDF increased with an increase in tidal volume and a decrease in respiratory flow rate. The effect of smoking has been discussed in previous work by McCawley and Lippmann (1988), where they found that small-airways disease in smokers was related to inhomogeneities of airflow and affected the pattern of particle deposition in the lung. They found that the relative peak height (ψ_p) and the time between inhaled and exhaled peaks (ψ_s) were the only two indexes that showed significant differences. In the study presented here, only healthy nonsmokers participated; however, no information regarding their lung health was obtained to incorporate in these evaluations. A closer look at this issue could also shed some light on the differences observed.

A comparison between the experimentally determined deposition efficiencies and those of the ICRP model was conducted. Reference parameters for female and male subjects were used assuming a "sitting" activity level (tidal volume of 464 ml and 750 ml for female and males, respectively). These values were selected based on the activity level even though the values listed under the ICRP model closest to our subjects corresponded to a "light exercise" activity level (tidal volume of 992 ml and 1250 ml for females and males, respectively). Since spontaneous breathing was used in this study, an assessment of the variability in intra- and intersubjects breathing patterns was conducted. The coefficients of variability (%CV) for the tidal volume (ml) were 19.2% and 31.4% for females and males, respectively. Similarly, these coefficients were 8.6% and 15.2% for the Minute Volume (ml/min) for females and males, respectively. The intravariability of the tidal volume for a female subject was evaluated at 15.8%, while for a male subject it was 27.2%.

The results of the ICRP model and the experimental results for female and male subjects are shown by Figures 9a and b, respectively. The minimum deposition efficiency estimated by the model was at 400–500 nm, while our results show minima between 200 and 400 nm, with average minima of about 200–300 nm for females and about 300–400 for males. This difference may be due to the fact that our ambient particles are hygroscopic (Tu and Knutson 1984; Schroeter et al. 2001). Although limited, the available chemical analysis data for these ambient particles (see Table 5) suggests that particles include hygroscopic components such as sulfate. Conducting controlled

Table 5
Ambient parameters during morning session of subject C

Session	Particle count (10^3 #/cm^3)	TEOM[a] corr. (μg/m^3)	CO (ppm)	Black carbon (μg/m^3)	Sulfate (μg/m^3)
Afternoon	36250	9.5	0.3	1.06	3.28
Morning	21250	11.8	0.4	1.22	5.67
Morning	34800	8.0	0.3	1.49	3.45
Afternoon	39833	14.8	0.4	1.65	3.02
Morning	53300	17.6	0.5	2.70	3.02
Afternoon	18767	15.1	0.3	0.95	2.60
Afternoon	16100	11.6	0.3	1.07	5.67
Afternoon	38100	8.1	0.3	1.21	3.45

[a]Corrected fine mass measured with a tapered element oscillating microscale (TEOM).

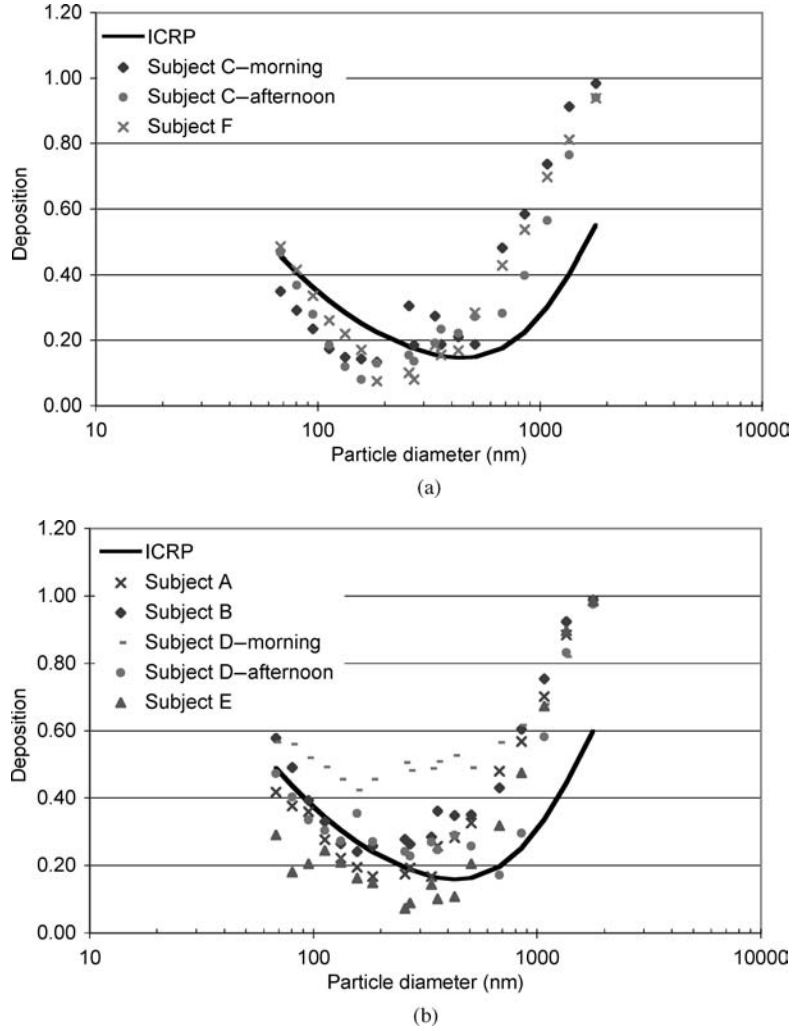

Figure 9. (a) Comparison of particle deposition efficiency for female subjects and ICRP model (63.5–2045 nm). (b) Comparison of particle deposition efficiency for male subjects and ICRP model (63.5–2045 nm).

exposure studies using monodisperse particles of known hygroscopic compositions (e.g., NH_4NO_3, $(NH_4)_2SO_4$, NaCl) would probably address some of these discrepancies by providing a baseline for well-characterized particles. However, the particles in this study are not expected to be homogenous in composition, even within a same size range. A previous study (Peters et al. 1995) where data from a SMPS and APS were merged found that the best data merging happened when a density of 1.3 g/cm^3 was assumed for the conversion of the SMPS data. This value corresponds to the density of wet ammonium sulfate aerosol, which agreed with the results of their more extensive chemical analysis. The use of the 1.7 g/cm^3 density value in this case, although not necessarily accurate, was meant to illustrate the type of adjustment that is required for handling data from two instruments using different mechanisms for measuring a particle diameter. Similarly the unprescribed nature of the breathing patterns could have introduced some error, particularly since some averaging was necessary for data reduction and the evaluation of both inhaled and exhaled particle concentrations. The hygroscopicity of these particles would directly impact their water uptake and subsequent deposition once they were in the respiratory tract. In the case of particles larger than the minimum diameters (200–500 nm) shown in Figures 7 through 9, the deposition will increase, while the opposite will happen for particles of diameters smaller than the minimum.

Overall, the ICRP model seems to predict deposition efficiencies well for ambient particles <400 nm for both male and female subjects. A slightly better fit seems apparent for male subjects, but that may be due to the larger sample number. For ambient particles >676 nm, the ICRP model seems to underpredict deposition efficiencies for both genders. This underprediction may be due to the hygroscopicity of the ambient particles, which would enhance their deposition efficiency but is not accounted

for in this ICRP model prediction (Broday and Georgopoulos 2001). Differences in test particles (i.e., composition) as well as intersubject variability in airway morphology and differences in breathing patterns used in the ICRP model and our study may also account for these differences (Hofmann et al. 2002; Heyder et al. 1986; Schulz et al. 2000; Lippmann 1977).

CONCLUSIONS

In this article the development and implementation of a method to determine deposition efficiency of ambient particles in the human respiratory tract experimentally were presented. Subjects performed natural nose breathing. Deposition efficiency results showed intrapersonal as well as interpersonal variability. Comparison with the ICRP model showed good agreement, particularly in the range of particle sizes <400 nm. Results reported by this study were based on exposures to polydisperse and hygroscopic ambient aerosols as well as on unscripted breathing patterns. To the best of the author's knowledge, this is the first time that all of these realistic conditions have been combined for the determination of particle deposition efficiencies in the human respiratory tract.

REFERENCES

Asgharian, B., Hofmann, W., and Bergmann, R. (2001). Particle Deposition in a Multiple-path Model of the Human Lung, *Aerosol Sci. Technol*. 34:332–339.

Babich, P., Wang, P. Y., Allen, G., Sioutas, C., and Koutrakis, P. (2000). Development and Evaluation of a Continuous Ambient PM2.5 Mass Monitor, *Aerosol Sci. Technol*. 32:309–324.

Broday, D. M., and Georgopoulos, P. G. (2001). Growth and Deposition of Hygroscopic Particulate Matter in the Human Lung, *Aerosol Sci. Technol*. 34:144–159.

Dab, W., Ségala, C., Dor, F., Festy, B., Lameloise, P., Le Moullec, Y., Le Tertre, A., Médina, S., Quénel, P., Wallaert, B., and Zmirou, D. (2001). Air Pollution and Health: Correlation or Causality? The Case of the Relationship between Exposure to Particles and Cardiopulmonary Mortality, *J. Air & Waste Manage. Assoc*. 51:220–235.

Diggle, P., Heagerty, P., Liang, K., and Zeger, S. (2002). *Analysis of Longitudinal Data.* 2nd ed., Oxford University Press, Oxford.

Dockery, D. W., Pope, C. A., Xu, X., Spengler, J. D., Ware, J. H., Fay, M. E., Ferris, B. G., and Speizer, F. E. (1993). An Association between Air Pollution and Mortality in Six U.S. Cities, *New Eng. J. Med*. 329(4):1753–1759.

Gazula, G. K. M., and Godleski, J. J. (2001). Flow Restrictor for Measuring Respiratory Parameters, *U.S. Patent* # 6224560B1.

Godleski, J. J., Verrier, R. L., Koutrakis, P., Catalano, P., Coull, B., Reinishch, U., Lovett, E. G., Lawrence, J., Murthy, G. G. K., Wolfson, J. M., Clarke, R. W., Nearing, B. D., and Killingsworth, C. (2000). *Mechanisms of Morbidity and Mortality from Exposure to Ambient Air Particles*, Research Report 91, Health Effects Institute, Cambridge, MA.

Hamelmann, E., Schwarze, J., Takeda, K., Oshiba, A., Larsen, G. L., Irvin, C. G., and Gelfand, E. W. (1997). Noninvasive Measurement of Airway Responsiveness in Allergic Mice using Barometric Plethysmography, *Am. J. Respir. Crit. Care Med*. 156:766–775.

Heyder, J., Gebhart, J., Heigwer, C., Roth, C., and Stahlhofen, W. (1973). Experimental Studies of the Total Deposition of Aerosol Particles in the Human Respiratory Tract, *Aerosol Sci*. 4:191–208.

Heyder, J., Gehart, J., Rudolf, G., Schiller, C. F., and Stahlhofen, W. (1986). Deposition of Particles in the Human Respiratory Tract in the Size Range 0.005–15 μm, *J. Aerosol Sci*. 17:811–825.

Hinds, W., First, M. W., Huber, G. L., and Shea, J. W. (1983). A Method for Measuring Respiratory Deposition of Cigarette Smoke during Smoking, *Am. Ind. Hyg. Assoc. J.* 44:113–118.

Hofmann, W., Asgharian, B., and Winkler-Heil, R. (2002). Modeling Intersubject Variability of Particle Deposition in Human Lungs, *Aerosol Sci*. 33:219–235.

Hofmann, W., Morawska, L., and Bergmann, R. (2001). Environmental Tobacco Smoke Deposition in the Human Respiratory Tract: Differences between Experimental and Theoretical Approaches, *J. Aerosol Med* 14(3):317–326.

International Commission on Radiological Protection (ICRP). (1994). *Human Respiratory Tract Model for Radiological Protection*, ICRP Publication 66, Pergamon Press, Oxford.

Jaques, P. A., and Kim, C. S. (2000). Measurement of Total Lung Deposition of Inhaled Ultrafine Particles in Healthy Men and Women, *Inhal. Toxicol*. 12:715–731.

Kim, C. S., and Hu, S. C. (1998). Regional Deposition of Inhaled Particles in Human Lungs: Comparison between Men and Women, *J. Appl. Physiol*. 84(6):1834–1844.

Lippmann, M. (1977). Regional Deposition of Particles in the Human Respiratory Tract, in *Handbook of Physiology: Reactions to Environmental Agents*, edited by D. H. K. Lee, H. L. Falk, S. D. Murphy, and S. R. Geiger. American Physiological Society, Bethesda, pp. 213–232.

McCawley, M., and Lippmann, M. (1988). Development of an Aerosol Dispersion Test to Detect Early Changes in Lung Function, *Am. Ind. Hyg. Assoc.* 49(7):357–366.

Morawska, L., Barron, W., and Hitchins, J. (1999). Experimental Deposition of Environmental Tobacco Smoke Submicrometer Particulate Matter in the Human Respiratory Tract, *Am. Ind. Hyg. Assoc. J.* 60:334–339.

Norris, G., Young Pong, S. N., Koenig, J. Q., Larson, T. V., Sheppard, L., and Stout, J. W. (1999). An Association between Fine Particles and Asthma Emergency Department Visits for Children in Seattle, *Environ. Health Perspect*. 107(6):489–493.

Peters, A., Liu, E., Verrier, R. L., Schwartz, J., Gold, D. R., Mittleman, M., Baliff, J., Oh, J. A., Allen, G., Monahan, K., and Dockery, D. W. (2000). Air Pollution and Incidence of Cardiac Arrhythmia, *Epidemiology* 11:11–17.

Peters, T. M., Chein, H. M., Lundgren, D. A., and Keady, P. B. (1993). Comparison and Combination of Aerosol Size Distributions Measured with a Low Pressure Impactor, Differential Mobility Particle Sizer, Electrical Aerosol Analyzer and Aerodynamic Particle Sizer, *Aerosol Sci. Technol.* 19:396–405.

Peters, T. M., Vanderpool, R. W., Burton, R. M., Lawrence, J., Abt, E., and Koutrakis, P. (1995). Combination of Aerodynamic Particle Sizer and Scanning Mobility Particle Sizer Data in Measuring Ambient Aerosols, In *Proceedings of the Fourteenth Annual Meeting of the American Association for Aerosol Research*, Pittsburgh, PA, October 9–13.

Salma, I., Balásházy, I., Hofmann, W., and Záray, G. (2002). Effects of Physical Exertion on the Deposition of Urban Aerosols in the Human Respiratory System, *J. Aerosol Sci*. 33:983–997.

Samet, J. M., Dominici, F., Curriero, F. C., Coursac, I., and Zeger, S. L. (2000). Fine Particulate Air Pollution and Mortality in 20 U.S. Cities, 1987–1994, *N. Engl. J. Med*. 343(24):1742–1749.

Schroeter, J. D., Musante, C. J., Hwang, D., Burton, R., Guilmette, R., and Martonen, T. B. (2001). Hygroscopic Growth and Deposition of Inhaled Secondary Cigarette Smoke in Human Nasal Pathways, *Aerosol Sci. Technol*. 34:137–143.

Schulz, H., Brand, P., and Heyder, J. (2000). Particle Deposition in the Respiratory Tract. In *Particle-Lung Interactions*, edited by P. Gehr and J. Heyder. *The Lung Biology in Health and Disease series*. Marcel Dekker, Inc., New York, vol. 143, pp. 229–290.

Schwartz, J., Dockery, D. W., and Neas, L. M. (1996). Is Daily Mortality Associated Specifically with Fine Particles?, *J. Air Waste Manage. Assoc*. 46:927–939.

Strong, J. C., Black, A., Knight, D. A., Dickens, C. J., and McAughey, J. (1994). The Regional Lung Deposition of Thoron Progeny Attached to the Particulate Phase of Environmental Tobacco Smoke, *Radiat. Prot. Dosim*. 54:47–56.

Tu, K. W., and Knutson, E. O. (1984). Total Deposition of Ultrafine Hydrophobic and Hygroscopic Aerosols in the Human Respiratory System, *Aerosol Sci. Technol.* 3(4):453–465.