Aerosol Science and Technology

ISSN: 0278-6826 (Print) 1521-7388 (Online) Journal homepage: http://www.tandfonline.com/loi/uast20

Use of Polyurethane Foam as the Impaction Substrate/Collection Medium in Conventional Inertial Impactors

Ilias G. Kavouras & Petros Koutrakis

To cite this article: Ilias G. Kavouras & Petros Koutrakis (2001) Use of Polyurethane Foam as the Impaction Substrate/Collection Medium in Conventional Inertial Impactors, Aerosol Science and Technology, 34:1, 46-56

To link to this article: http://dx.doi.org/10.1080/02786820118288

Published online: 30 Nov 2010.

Submit your article to this journal

Article views: 234

View related articles

Citing articles: 36 View citing articles

Full Terms & Conditions of access and use can be found at
http://www.tandfonline.com/action/journalInformation?journalCode=uast20

Download by: [University of North Texas] **Date:** 21 January 2017, At: 23:12

Aerosol Science and Technology 34: 46–56 (2001)
© 2001 American Association for Aerosol Research
Published by Taylor and Francis
0278-6826/01/$12.00 + .00

Use of Polyurethane Foam as the Impaction Substrate/Collection Medium in Conventional Inertial Impactors

Ilias G. Kavouras and Petros Koutrakis
Environmental Science and Engineering Program, Department of Environmental Health, School of Public Health, Harvard University, Boston, Massachusetts

Open pore polyurethane foam (PUF) can be used effectively as a substrate for conventional inertial impactors with both high particle collection efficiency and minimal vaporization of semi-volatile particle components. The collection characteristics of PUF as an impaction substrate were studied as a function of PUF density, Reynolds number, impaction substrate diameter, and nozzle-to-plate distance. The conventional impaction substrate of the $PM_{2.5}$ Harvard Impactor sampler was replaced with the PUF substrate. The use of PUF resulted in significant changes in the collection efficiency curve, with the 50% cut-off size (d_{50}) decreasing from 2.48 to 1.12 μm, corresponding to $\sqrt{\text{Stk}} = 0.24$. While the theory for conventional flat impaction substrates accurately predicts d_{50} values (at $\sqrt{\text{Stk}} = 0.49$), for PUF substrates this same theory predicts d_{50} values much larger than the experimentally determined values. After the collision of the particles with the PUF, a greater fraction of their excess kinetic energy may be absorbed by the substrate than is absorbed by conventional substrates, reducing the amount of particles that would otherwise bounce off or be reentrained. Furthermore, qualitatively similar results were obtained for PUF densities between 1.9×10^4 and 5.0×10^4 g/m^3. Results obtained for varying Reynolds numbers also suggest that the difference in collection efficiency curves between PUF and oil-coated substrates is due to different flow patterns. In addition, tests showed that the overall impactor performance was better for larger impaction plate diameters for both PUF and conventional substrates. Finally, significant distortion of the collection efficiency curve was observed for larger nozzle-to-plate distance.

INTRODUCTION

A large number of conventional inertial impactors have been designed and validated with cut-off sizes between 0.005 and 50 μm (Berner et al. 1979; Vanderpool et al. 1987). Many of these commercially available instruments have been used to study the size distribution of particles in a variety of environments. The principle of inertial impaction allows classification of airborne particles as a function of aerodynamic diameter (Pierce and Katz 1975; Milford and Davidson 1985; Venkataraman et al. 1994). The performance of conventional impactors has been studied both theoretically and experimentally, and their behavior and characteristics can be predicted quite accurately (Marple and Liu 1974; Marple et al. 1993). The 50% size cut-point (d_{50}) corresponds to the square root of the Stokes number ($\sqrt{\text{Stk}} = 0.49$) (Hinds 1999).

Particles with sufficient inertia to cross the air streamlines above the impaction substrate collide with the substrate. This collision of the particle with substrate results in the transfer of some of the particle kinetic energy to the substrate, as well as internal absorption of some energy by the particle itself (such as by deformation of shape). Particles that contact the impaction substrate are attracted by strong adhesive forces. A particle is retained by the substrate if these adhesive forces dominate over the excess particle kinetic energy, which is the difference between the initial airborne kinetic energy and the sum of the energy that is transferred to the substrate and internally absorbed. The amount of both substrate internal energy absorption and the amount of energy transferred to the substrate increases with particle velocity and size. However, above some maximum particle kinetic energy, there will be enough excess kinetic energy to overcome the adhesive forces, and the particle may bounce away from the surface and be re-entrained into the airstream. Thus bounce-off losses increase with particle rigidity, size, and velocity (Sehmel et al. 1978; Wall et al. 1990; John et al. 1991; John and Sethi 1993).

In addition, particles with high inertia may dislodge previously collected material, causing resuspension of already collected particles from the impaction substrate back into the airstream. Individual particles, small clusters, or a whole section of the layer can be detached and reentrained into the airstream lines due to the collision of a high-energy particle. In order to reduce both bounce-off and reentrainment losses, which can seriously

Received 14 February 2000; accepted 12 June 2000.
Address correspondence to Ilias G. Kavouras, Ph.D., Environmental Science and Engineering Program, School of Public Health, Harvard University, 665 Huntington Avenue, Boston, MA 02115. E-mail: kavouras@hsph.harvard.edu

distort the size distribution of collected particles, impaction substrates must be coated with oil or grease. However, there are two limitations of using such coatings: a) components of coating substances may cause interferences with chemico-physical and biological tests of the collected particles; and b) the collection efficiency of the substrate may depend on the amount of particles collected (Pak et al. 1992, Tsai and Cheng 1995; Biswas and Flagan 1988).

As an alternative to conventional impaction substrates, polyurethane foam (PUF) was employed to investigate its particle collection characteristics. We report here the results for different types of open pore PUF as an impaction substrate/collection medium. PUF is manufactured by polymerization of ethyl carbamate (H_2N-C(=O)O-CH_2CH_3) under high pressure and temperature. Several types of PUF (SUPELCO, Supelco Park, Bellefonte, PA) are widely used to collect the gas phase of semi-volatile organic compounds downstream of a particle filter (Patton et al. 1992; Hawthorne et al. 1992; Kavouras et al. 1999). However, due to its relatively large pore sizes, PUF is not suitable for quantitative collection of smaller ambient air particles by filtration (passing sample air through the material). Although such porous foams used as filters in parallel or in series were suggested as pre-selective inlets to filter sample air (Gibson and Vincent 1981; Mark et al. 1988; Wake and Brown 1991; Aitken et al. 1993; Vincent et al. 1993), there were problems of bounce-off losses of solid particles (Chen et al. 1998). These losses can seriously distort the collection characteristics of PUF. Nonetheless, because of their large pores and their relatively low overall density, these materials may be suitable impaction substrates for conventional impactors. The difference between using the foam as a filter and as an impaction substrate is that the sample air passes completely through the foam for filtration, but for impaction the sample air, coming out of an acceleration jet, must change direction due to the solid surface below the foam.

EXPERIMENTAL METHODS

The Harvard Impactor (HI) sampler ($d_{50} = 2.43$; Re = 4414) (Air Diagnostics and Engineering, Inc., Harrison, ME) (Marple et al. 1987) was employed to investigate the feasibility of using PUF as an impaction substrate (Figure 1). The jet diameter (W) is 0.32 cm at 10 L/min. The throat length (T) for the HI, T = 0.46 cm, with T/W = 1.43 (Figure 1a). The impaction substrate is an oil-coated porous metal disk impaction with diameter (D) of 2.54 cm (Figure 1b). It is placed 0.76 cm below the nozzle of the impactor.

The collection efficiency of $PM_{2.5}$ HI sampler was measured using both its standard impaction plate and PUF substrate. The collection efficiency of PUF at different nozzle-to-plate distances (S) and Reynolds numbers (Re) was also determined. The standard impaction substrate was replaced with different density PUF ($D = 2.54$ cm, thickness, $t = 0.32$ cm) (PUF_1: $d_1 = 1.9 \times 10^4$ g/m^3, PPC (pores per cm) = 19.7, (Merryweather Foam, Barbarton, OH); PUF_2: $d_2 = 2.2 \times 10^4$ g/m^3, PPC = 25.6, (SKC, Eighty Four, PA); PUF_3: $d_3 = 3.0 \times 10^4$ g/m^3, PPC = 19.7 (McMaster-Carr Co., New Brunswick, NJ); PUF_4: $d_4 = 5.0 \times 10^4$ g/m^3, PPC = 15.7 (McMaster-Carr Co., New Brunswick, NJ) (Figure 1a,b; Table 1).

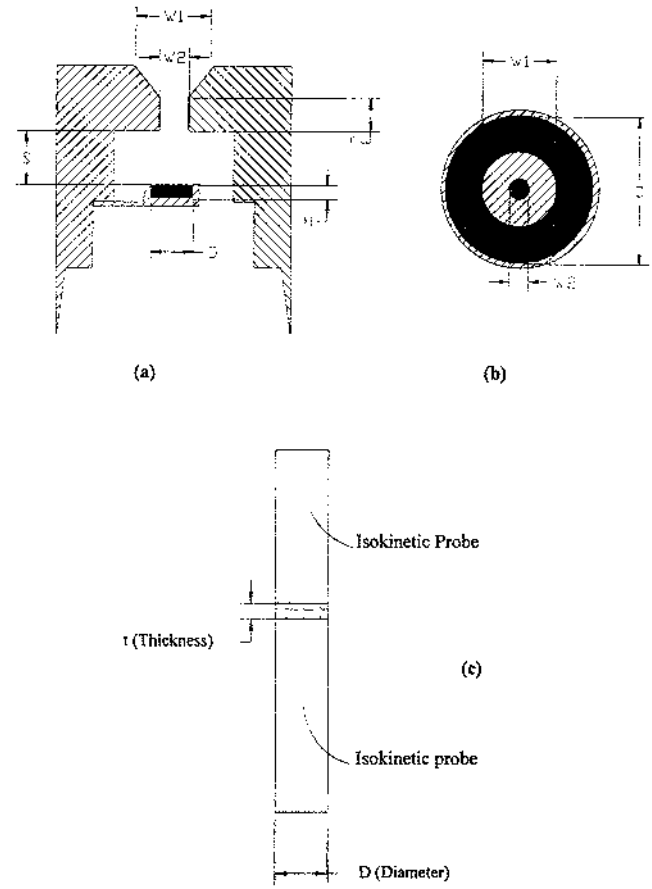

Figure 1. Schematic diagrams of the impactor components of the $PM_{2.5}$ HI (a,b) and the setup for filtration tests (c).

The effect of the impaction substrate size, D (disk diameter), was also determined using both the oiled porous plate and PUF_3, with D between 0.95 to 2.54 cm. In addition, experiments were conducted using PUF with diameter D_d (0.32, 0.64, 0.95, and 1.58 cm) centered inside a nonporous 2.54 cm impaction plate to study the effect of the diameter of the "active" impaction surface on the collection efficiency. Other tests with the HI sampler with PUF_3 were conducted by increasing the nozzle-to-plate distance (S) from 0.76 to 2.04 cm, which corresponded to S/W ratios of 2.34 to 6.37, respectively. In addition, the Reynolds number varied between 2207 to 6622 by adjusting the flow rate (Q) from 5 to 15 L/min. The role of PUF as filtration medium was also examined. In particular, the collection efficiency of particles from 0.5 to 10 μm was measured as a function of flow rate (Q: from 100 to 750 L/min) and PUF thickness (t: 0.32 to 1.27 cm) using the apparatus shown in Figure 1c.

Polydisperse particles with a nominal size range of 2–20 μm (hollow glass spheres, density = 1.1×10^6 g/m^3, Polysciences, Inc, Warrington, PA) were generated with a nebulizer (Retec

Table 1
Overview of physical characteristics of PUF

	Density (g/m^3)	Number of porous per cm (PPC)	Dimensions	Manufacturer
PUF_1	1.9×10^4	19.7	2.54×0.32	Merryweather Foam, Barbarton, OH
PUF_2	2.2×10^4	25.6	2.54×0.32	SKC, Eighty Four, PA
PUF_3	3.0×10^4	19.7	2.54×0.32	McMaster, New Brusnick, NJ
PUF_4	5.0×10^4	15.7	2.54×0.32	McMaster, New Brusnick, NJ

Model X-70/N) using an external reservoir with an aqueous suspension of the glass spheres (Ding and Koutrakis 1999) (Figure 2). The generated aerosol was mixed with (relatively dry) filtered room air and passed into the top end of a vertical anodized aluminum cylindrical duct (35.0 cm [L] $\times$ 7.6 cm [id]). Additional filtered dry room air was also added at the top of the duct to increase the total flow. Turbulence was induced near the top of the duct, using a rectangular plate, to assure uniform concentration downstream.

The sampler was connected to the bottom of the duct. The size distribution of generated particles was measured upstream and downstream of the impactor system with isokinetic probes. In each experiment, the concentration and size distribution of particles was measured for 5 min upstream, 5 min downstream, and then 5 min again upstream. Each experiment was repeated at least nine times in order to get reproducible and accurate measurements of the number and the size distribution of generated particles. The Aerodynamic Particle Sizer (APS) (Model 3320, TSI Inc., St. Paul, MN) was used to measure particle number concentrations for aerodynamic diameters between 0.5 and 10 μm.

The collection efficiency for a given particle size was calculated as follows:

$$\%E = \left(1 - \frac{N_{\text{downstream}}}{N_{\text{upstream}}}\right) \times 100,$$

where $N_{\text{downstream}}$ and N_{upstream} were the number concentrations for a given particle size before and after the sampler. To determine the d_{50} size and the sharpness (s) of the collection curve, the experimental data were fitted using the Levenburg-Marquardt nonlinear least squares curve fitting algorithm (Origin, Version 5.0, MicroCal Software Inc.). The following equations were used

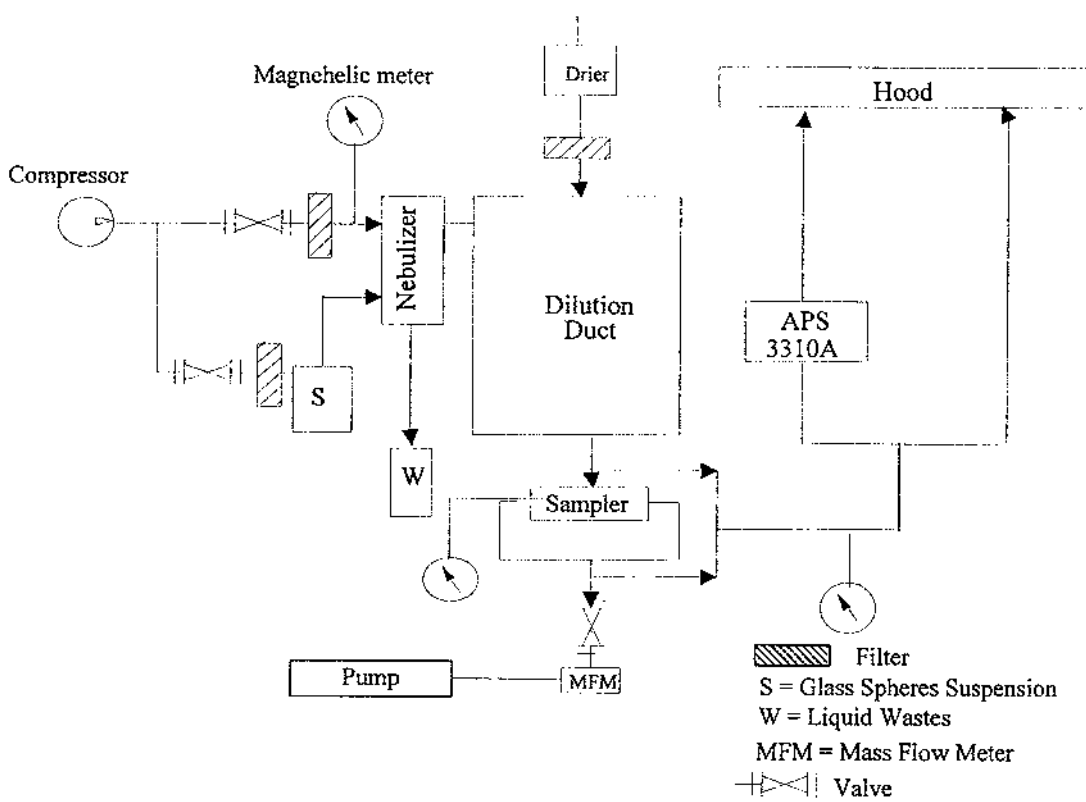

Figure 2. The experimental apparatus.

to fit the experimental data.

$$\%E = \frac{A - B}{1 + \exp\left(\frac{X}{C} - D\right)} + B \quad \text{and}$$

$$\%E = \frac{A - B}{1 + \left(\frac{X}{C}\right)^d} + B,$$

where $\%E$ is the percent collection efficiency; x is the square root of Stokes number ($\sqrt{\text{Stk}}$); and A, B, C, D, and d are regression constants. A and B correspond to the minimum ($E_{\min}$) and maximum ($E_{\max}$) collection efficiency, respectively; and C, D, and d are factors related to the sharpness of the curve. The square root of Stokes number was calculated as follows:

$$\sqrt{\text{Stk}} = d_p \cdot \sqrt{\frac{p_p \cdot U \cdot C_c}{9 \cdot \mu \cdot W}},$$

where μ is the dynamic viscosity of the air (1.81×10^{-2} g/(m s)), d_p is the particle aerodynamic diameter (μm), p_p is the particle density (1.00×10^6 g/m^3), W is the nozzle diameter (m), U is the jet velocity (m/s), and C_c is the Cunningham slip correction factor.

The d_{50}, d_{16}, and d_{84} values (the aerodynamic diameter of particles having collection efficiency of 50, 16, and 84%, respectively) were calculated using the above equations. The sharpness (s) of the collection efficiency curve was estimated as follows (Hinds 1999):

$$s = \sqrt{\frac{d_{84}}{d_{16}}}.$$

The square of the correlation coefficient (R^2) was higher than 0.99 for most tests.

RESULTS AND DISCUSSION

Table 2 shows the design parameters and results for the following features: 1) nozzle diameter, W (cm); 2) nozzle-to-plate distance, S (cm); 3) diameter of impaction plate, D (cm); 4) type of impaction plate, 5) flow rate, Q (L/min); 6) Reynolds number, Re (dimensionless); 7) air velocity, U (cm/sec); 8) theoretical d_{50} (μm); 9) experimental d_{50} (μm); 10) square root of the Stokes number, $\sqrt{\text{Stk}}$ (dimensionless); 11) sharpness of the curve, s (dimensionless); 12) maximum collection efficiency $E_{\max}$ (%); and 13) pressure drop, ΔP (atm).

The collection efficiency ($\%E$) curves of HI with its standard impaction substrate and PUF$_3$ are shown in Figure 3. The experimental d_{50} value with standard impaction substrate was 2.48 μm. It was slightly higher than the theoretical value ($d_{50(\text{HI})}$ = 2.43 μm; Table 2). The sharpness of the curve (s) was 1.17. However, for the HI sampler, the collection of coarse particles ($d_p \geq 3$ μm; $\sqrt{\text{Stk}} \geq 0.8$) was not efficient ($E_{\max} = 92.7\%$), which indicates that particle bounce occurred from the impaction substrate (using oil-coated porous metal) (Figure 3).

The experimental d_{50} values for HI with PUF substrate was 1.12 μm ($\sqrt{\text{Stk}} = 0.24$) (Table 2). As shown in Figure 3, the d_{50} value was substantially lower than both the nominal (theoretical) and experimental d_{50} for its standard impaction plate. The curve sharpness for the PUF substrate (s) was 1.32, which is higher than the corresponding values for standard impaction plates. This indicates that separation of particles below and above the d_{50} for PUF is not quite as good as with the standard substrates. Another important observation was that a lower d_{50} was achieved at a relatively low pressure drop ($\Delta P = 1.9 \times 10^{-2}$ atm) with PUF substrates. This feature allows for less vaporization of semi-volatile components during sampling, especially for the classification and collection of ultrafine particles.

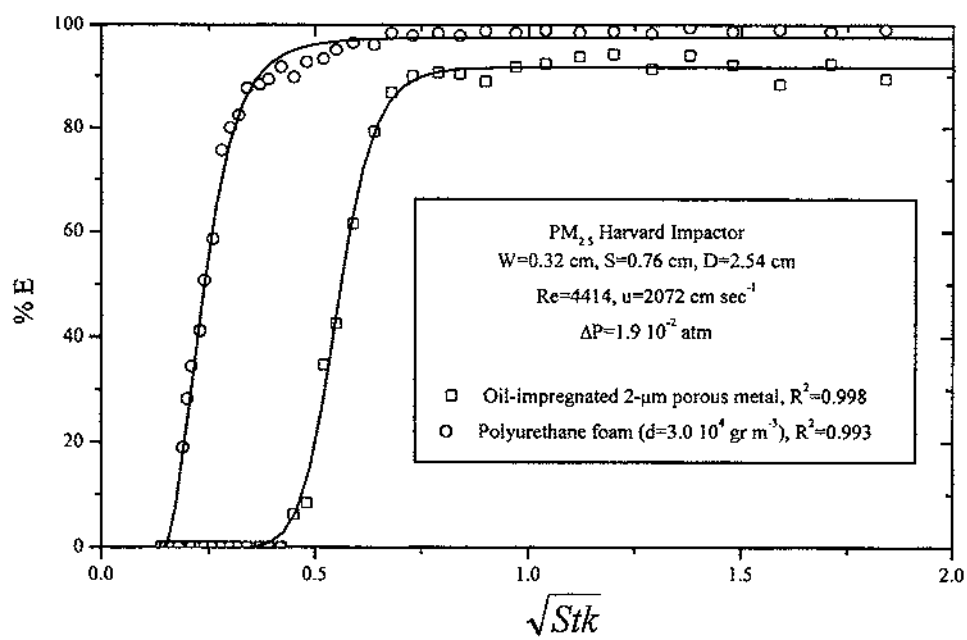

Figure 3. Collection efficiency of HI at 10 L/min using its standard impaction substrate and PUF.

Table 2
The design parameters, and the theoretical and experimental characteristics of, impactor modifications†

	Design parameters				Impactor theoretical characteristics				Impactor experimental characteristics				
No.	W (cm)	S (cm)	D (cm)	Impaction plate	Q (L/min)	U (cm/sec)	Re	Nominal d_{50} (μm)	Experimental d_{50} (μm)	$\sqrt{\text{Stk}}$	σ_g	$E_{\max}$	ΔP (10^{-2} atm)
1	0.32	0.76	2.54	OIPM	10.0	2072	4414	2.43	2.48	0.51	1.17	92.8	1.9
2	0.32	0.76	2.54	PUF_3	10.0	2072	4414	2.43	1.12	0.25	1.32	97.6	1.9
3	0.32	0.76	2.54	OIPM	5.0	1036	2207	3.47	3.36	0.48	1.09	87.3	0.6
4	0.32	0.76	2.54	OIPM	7.5	1554	3311	2.82	2.79	0.49	1.13	91.4	1.3
5	0.32	0.76	2.54	OIPM	10.0	2072	4414	2.43	2.48	0.51	1.17	92.7	1.9
6	0.32	0.76	2.54	OIPM	15.0	3108	6622	1.97	1.89	0.48	1.28	93.7	3.2
7	0.32	0.76	2.54	PUF_3	5.0	1036	2207	3.47	1.76	0.25	1.42	95.6	0.6
8	0.32	0.76	2.54	PUF_3	7.5	1554	3311	2.82	1.30	0.24	1.37	96.4	1.3
9	0.32	0.76	2.54	PUF_3	10.0	2072	4414	2.43	1.12	0.24	1.32	97.1	1.9
10	0.32	0.76	2.54	PUF_3	15.0	3108	6622	1.97	1.07	0.28	1.34	97.5	3.2
11	0.32	0.76	2.54	PUF_1	10.0	2072	4414	2.43	1.13	0.24	1.27	97.6	1.9
12	0.32	0.76	2.54	PUF_2	10.0	2072	4414	2.43	1.12	0.24	1.32	97.4	1.9
13	0.32	0.76	2.54	PUF_3	10.0	2072	4414	2.43	1.12	0.24	1.31	98.3	1.9
14	0.32	0.76	2.54	PUF_4	10.0	2072	4414	2.43	1.23	0.26	1.35	97.9	1.9
15	0.32	1.08	2.54	PUF_3	10.0	2072	4414	2.43	1.12	0.24	1.32	97.6	1.9
16	0.32	1.40	2.54	PUF_3	10.0	2072	4414	2.43	1.22	0.26	1.54	98.1	1.9
17	0.32	1.72	2.54	PUF_3	10.0	2072	4414	2.43	1.36	0.29	1.61	98.5	1.9
18	0.32	2.04	2.54	PUF_3	10.0	2072	4414	2.43	1.78	0.37	1.52	98.0	1.9
19	0.32	2.36	2.54	PUF_3	10.0	2072	4414	2.43	1.82	0.38	1.93	103.2	1.9
20	0.32	0.76	2.54	OIPM	10.0	2072	4414	2.43	2.48	0.51	1.17	97.6	1.9
21	0.32	0.76	1.58	OIPM	10.0	2072	4414	2.43	2.52	0.52	1.22	89.9	1.9
22	0.32	0.76	0.95	OIPM	10.0	2072	4414	2.43	2.41	0.50	1.22	86.6	1.9
23	0.32	0.76	2.54	PUF_3	10.0	2072	4414	2.43	1.12	0.24	1.32	97.6	1.9
24	0.32	0.76	1.58	PUF_3	10.0	2072	4414	2.43	1.12	0.24	1.34	97.4	1.9
25	0.32	0.76	0.95	PUF_3	10.0	2072	4414	2.43	1.12	0.24	1.46	93.5	1.9
26	0.32	0.76	1.58[1]	PUF_3	10.0	2072	4414	2.43	1.19	0.25	1.31	97.5	1.9
27	0.32	0.76	0.95[1]	PUF_3	10.0	2072	4414	2.43	1.33	0.28	1.28	95.1	1.9
28	0.32	0.76	0.64[1]	PUF_3	10.0	2072	4414	2.43	1.43	0.30	1.42	92.0	1.9
29	0.32	0.76	0.32[1]	PUF_3	10.0	2072	4414	2.43	1.70	0.35	1.41	95.3	1.9

[1]It is the PUF diameter which was centered in a 2.54 cm impaction plate; the rest was sealed with a nonporous material.

†W is the nozzle diameter; S is the nozzle-to-plate distance; D is the impaction plate diameter; U is the air velocity at the exit of the nozzle; $\sqrt{\text{Stk}}$ is the square root of Stokes number; d_{50} is the 50% cut-off size; σ_g is the geometric standard deviation; $E_{\max}$ is the maximum collection efficiency; ΔP is the pressure drop in the impactor; OIPM is the oil-impregnated porous metal; and PUF_3 is polyurethane foam with density $d = 0.030$ gr/cm^3.

The apparent reduction in particle bounce off using PUF as an impaction substrate could be explained by a mechanism whereby a substantial fraction of the particles that may bounce off after impaction may be subsequently trapped on the internal walls of the open pores of the PUF. Another possible explanation is that the flexibility of the PUF pore walls allows for more absorption of excess particle kinetic energy as compared to the rigid standard substrates. The consequences of these possible mechanisms are that many layers of precollected particles could be formed, without significant deterioration of the collection efficiency, with the potential for greater collection capacity than with conventional substrates. The capacity of the substrate (impaction substrate surface: 0.84 cm^2; impaction substrate depth: 0.32 cm) is 1.81 g (Kavouras et al. 2000) corresponding to 2.15 g/cm^2. This is more than two orders of magnitude higher than those observed for uncoated (0.43 mg/cm^2) and oil-coated (1.37 mg/cm^2) impaction substrates (Tsai and Cheng 1995). Consequently, a relatively small piece of PUF (e.g., $D = 2.54$ cm, $t = 0.32$ cm, $V = 1.32$ cm^3) can be used to collect a relatively large quantity of ambient particles, improving the sensitivity of chemical, biological, and toxicological tests, compared to previously available collection methods.

Since the polyurethane foam has relatively large pore sizes (Table 2), it is conceivable that a substantial fraction of the sample air passes through the PUF. Therefore, in addition to impaction, particles may be collected by filtration. For this reason,

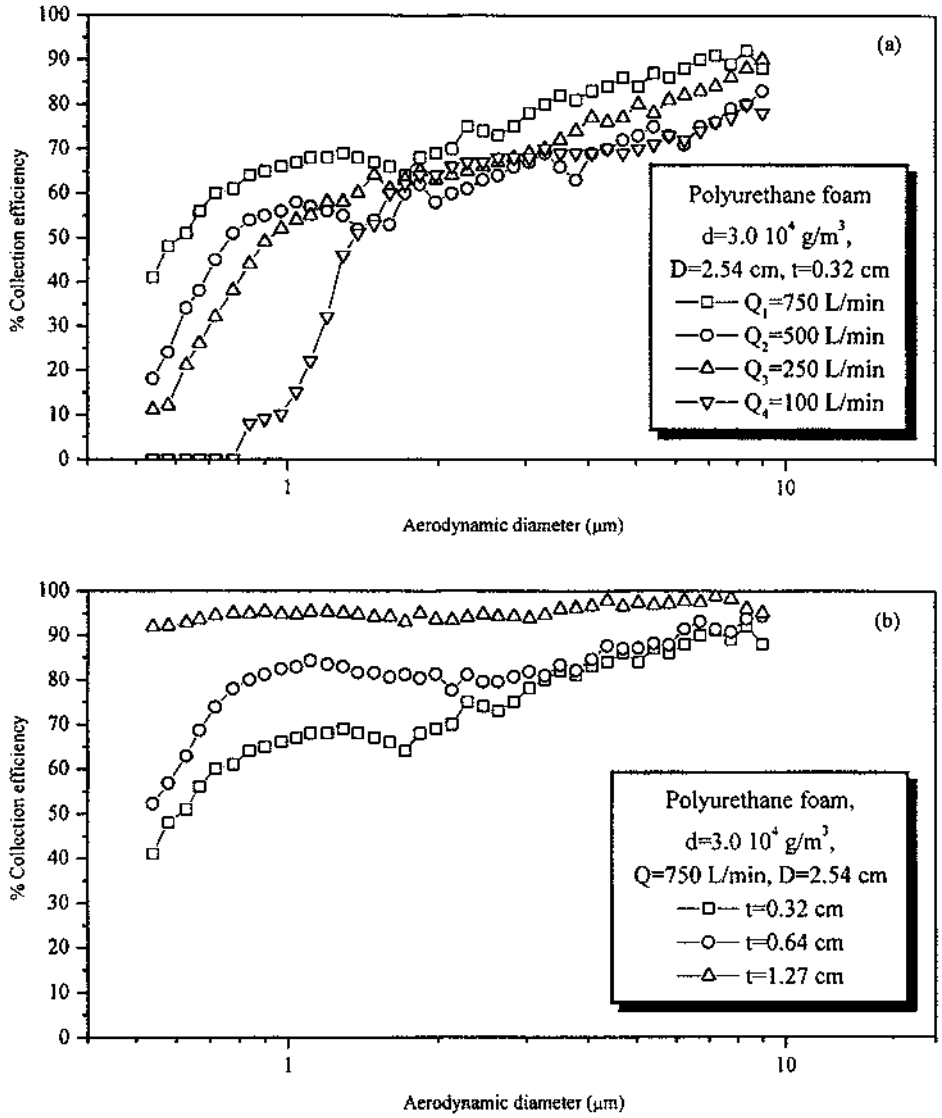

Figure 4. Collection efficiency of PUF as filtration medium at different flow rates (a) and substrate thickness (b).

a series of experiments were performed to evaluate the collection performance of PUF as filter. Figures 4a and b show the effect of flow rate (Q) and PUF thickness (t) on particle collection. The collection efficiency curve was substantially shifted when the flowrate increased from 100 ($u = 328.9$ cm/s) to 750 L/min ($u = 2446.8$ cm/s). The d_{50} cut-off decreased from about 1.5 μm at 100 L/min to about 0.6 μm at 750 L/min. However, the collection efficiency for larger particles was poor (Figure 4a). The collection efficiency for fine particles ($1.0 < d_p < 2.5\mu$m) was $<70\%$, while for large particles (above 2.5 μm) it increased gradually to a maximum of 90% (Figure 4a). These results are in agreement with those reported by Chen et al. (1998), who showed that the poor collection of coarse particles is an important limitation for the use of PUF as a size-selective filtration medium. The role of PUF thickness was also investigated (Figure 4b). As expected, the d_{50} shifted to smaller sizes when PUF thickness increased from 0.32 to 0.64 cm. In addition, the collection efficiency of fine particles increased. However, penetration of larger particles was still significant, indicating poor collection efficiency for coarse particles. As can be seen from the above results, the collection efficiency curves are quite different when using PUF as a filter as compared to those obtained when using PUF as an impaction substrate. Consequently, we infer that when PUF is used as an impaction substrate, particle collection by filtration should be negligible.

The following sections present the results of the subsequent collection efficiency tests based on varying the different design parameters using the PUF substrates.

Effect of Reynolds Number (Re)

The magnitude of the airflow through the acceleration nozzle determines whether inertial or viscous forces dominate. This feature is mathematically expressed using the Reynolds number,

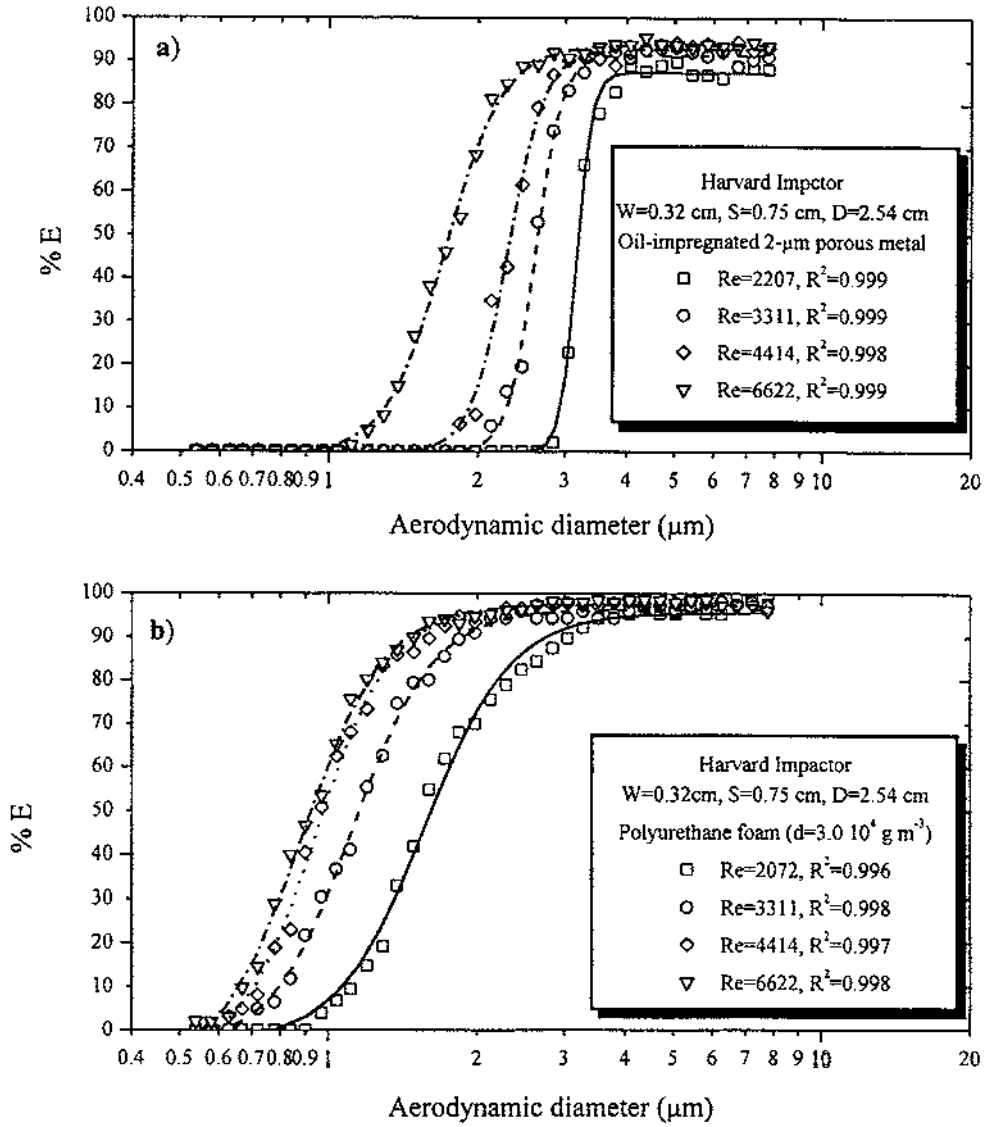

Figure 5. Collection efficiency of HI at 10 L/min using oil-impregnated porous metal (a) and PUF (b) at different Re.

Re (Hinds 1999). For a given nozzle, the Re value increases with increasing flow. Figure 5a shows the collection efficiency curves for the HI acceleration nozzle at four different flow rates (5, 7.5, 10, and 15 L/min[1], for Q_1, Q_2, Q_3, and Q_4, respectively, with corresponding Re values of 2207, 3311, 4414, and 6622) using oil-coated porous metal as the impaction substrate (diameter, $D = 2.54$ cm). Figure 5b shows the corresponding results for the same values of Q, using PUF_3 as the impaction substrate ($D = 2.54$ cm). Figure 6 shows the d_{50} values for both substrates as a function of Re.

For the oil-coated porous metal substrate, the d_{50} decreased from 3.36 μm ($\sqrt{\text{Stk}} = 0.48$, $Q_1 = 5$ L/min; Re = 2207) to 1.89 μm ($\sqrt{\text{Stk}} = 0.48$, $Q_4 = 15$ L/min; Re = 6622) (Table 2). These d_{50} values were slightly lower than the ones predicted by theory (for $\sqrt{\text{Stk}} = 0.49$, the corresponding values of d_{50} for Q_1 and Q_4 were 3.47 and 1.97 μm, respectively). The sharpness of the curve, s, increased with Re. The corresponding s values were 1.09 and 1.28 for Re values of 2207 and 6622, respectively. For the highest value of Re (6622), there was an enhanced particle collection efficiency with size $\geq d_{50}$. The maximum collection efficiency ($E_{\max}$) also increased with Re. For particle sizes $\geq 3\mu$m, $E_{\max}$ increased from 87.3 to 93.7% when Re changed from 2207 to 6622 (Table 2).

With PUF_3 as the substrate there was, in general, the same pattern as with the oiled porous metal with the value of d_{50} decreasing from 1.76 to 1.07 μm for Re values of 2207 and 6622, respectively. For all Re values, the d_{50} corresponded to $\sqrt{\text{Stk}} = 0.24 \pm 0.01$. The theory for flat impaction substrates predicts values of d_{50} corresponding to values of $\sqrt{\text{Stk}} = 0.49$, independent of Re value; however, the observed d_{50} values for PUF_3 were substantially lower than the corresponding theoretical values (3.47 and 1.97 μm for Re values of 2207 and 6622, respectively). As with the standard substrate, for PUF_3 the values of s slightly varied with flow rate, but they were higher than

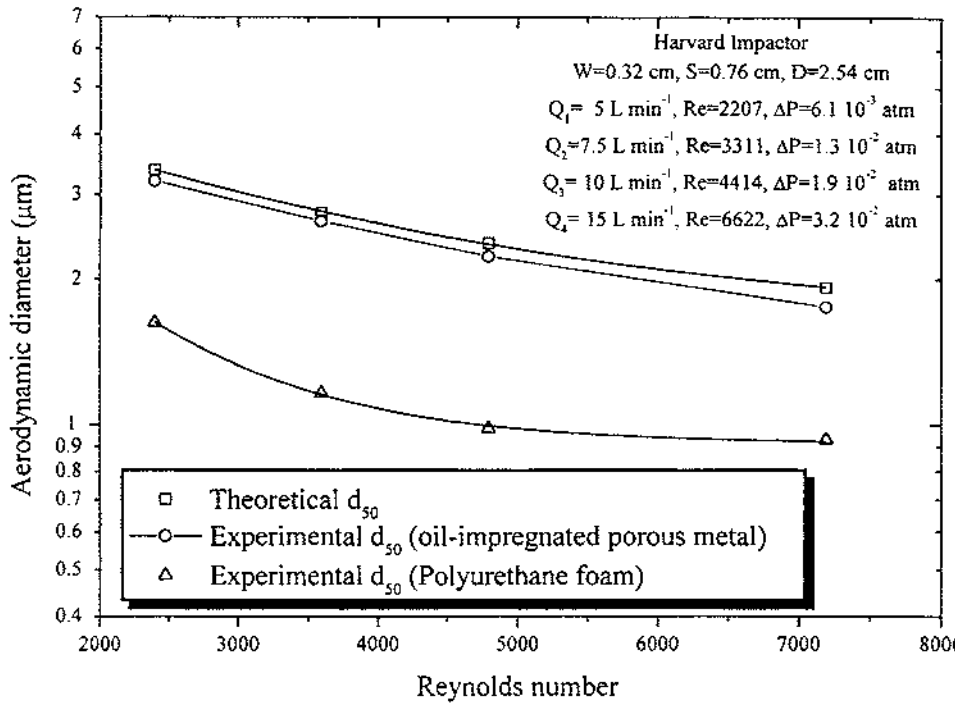

Figure 6. The theoretical and experimental using oil-impregnated and polyurethane foam, d_{50} cut-off sizes at different Re.

the corresponding values for the oiled metal substrate. Finally, the maximum collection efficiency values for PUF_3 were higher than the corresponding values for the standard substrate and increase with Re.

Effect of PUF Density

Many types of PUF are commercially available, and the effects on collection efficiency are likely to vary with different PUF properties. In this study, the effect of PUF density (d in g/m^3) on particle collection efficiency was investigated (Figure 7). Particle collection efficiency did not change substantially for densities varying between 1.9×10^4 and 3.0×10^4 g/m^3; however, there was a slight decrease in the collection efficiency for larger particle sizes when the highest density PUF was used ($d = 5.0 \times 10^4$ g/m^3). The maximum collection efficiency remained stable and high ($E_{max} = 97.9$–98.3%), indicating that the

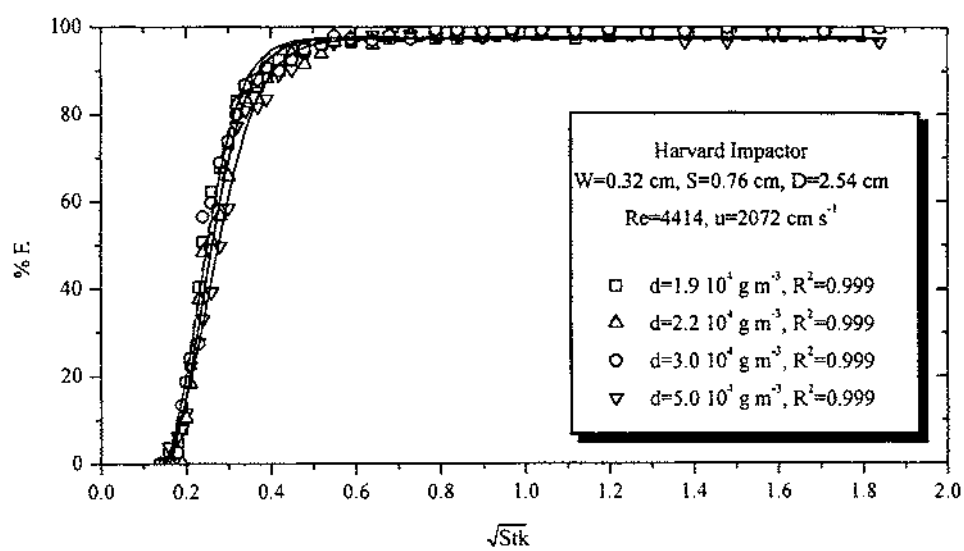

Figure 7. Collection efficiency of HI at 10 L/min using PUF with different density.

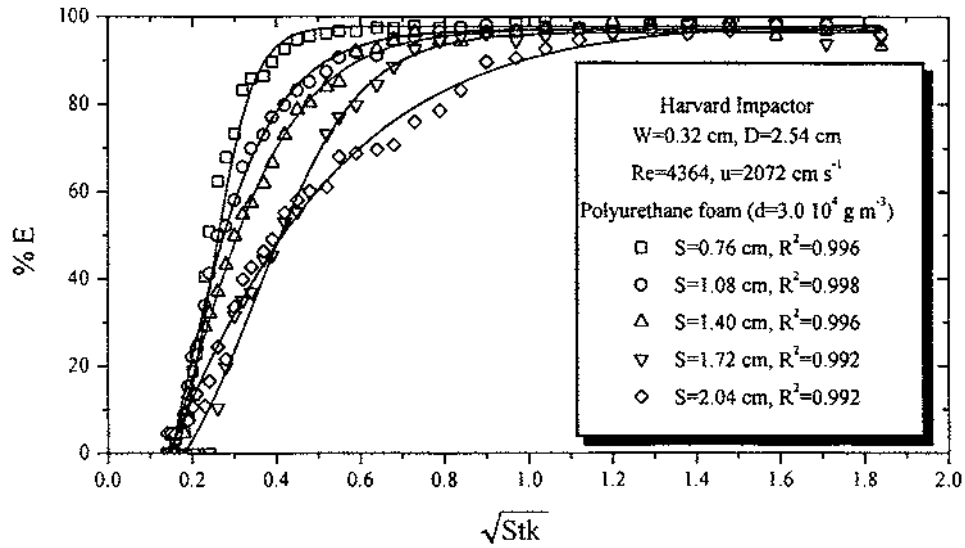

Figure 8. Collection efficiency of HI at 10 L/min using PUF at different nozzle-to-plate distances (S).

collection of larger particles was very efficient and that bounce-off losses were minimal. While there was no difference in the d_{50} (1.12 μm) for densities of 1.9, 2.2, and 3.0 10^4 g/m^3, there were slight differences in the sharpness of the collection efficiency curve ($s = 1.27$ for $d = 1.9 \times 10^4$ g/m^3 and $s = 1.31$ for both $d = 2.2 \times 10^4$ and 3.0×10^4 g/m^3).

Effect of Nozzle-to-Plate Distance (S)

Figure 8 shows the collection efficiency curves for nozzle-to-plate distance (S) values of 0.76, 1.08, 1.40, 1.72, and 2.04 cm for HI samplers with PUF_3 substrates. The flow pattern, the thickness of the boundary layer, and the strength of inertial forces are all affected by the value of S. In particular, the air streamlines become more widely separated with increases in the nozzle-to-plate distance with deacceleration and thus a thicker boundary layer. These results suggest that s increase with S. Sharpness with values of 1.32 to 1.93 were observed for S values of 0.76 and 2.04 cm, respectively, while the corresponding values of d_{50} were 1.12 and 1.82 μm. These results confirm that the nozzle-to-plate distance is a critical factor, especially in the case of PUF where the collection efficiency appears to be strongly affected by the flow pattern and the thickness of boundary layer.

Effect of Impaction Plate Diameter (D)

Earlier studies have paid little attention to the effect of impaction plate diameter (D) on the performance of inertial impactors using flat plate substrates. It has been assumed that a substrate with a diameter of two to four times the nozzle diameter is adequate for high collection efficiency of particles above the theoretical d_{50} and that larger impaction plates would not improve the impactor performance. However, it was uncertain whether this assumption was valid for the PUF substrate. Figures 9a,b show the results for the HI sampler for varying D (from 0.95 to 2.54 cm), using both oil-coated porous metal and PUF substrates.

There were only small effects of plate diameter on the d_{50} and σ_g values for the oiled-porous metal substrate (Figure 8a; Table 2). For values of D of 0.95 and 2.54 cm, the corresponding values of d_{50} were 2.41 and 2.48 μm; the values of s were 1.17 and 1.22, respectively. However, E_{max} decreased significantly when the smaller plate diameter was used (97.7% and 86.6% for D values of 2.54 and 0.95 cm, respectively).

Similar effects of varying the substrate diameter were observed for PUF_3. The values of s increased slightly from 1.32 for the original 2.54 cm diameter to 1.34 and 1.46 for diameters of 1.58 and 0.95 cm, respectively (Table 2). E_{max} decreased from 97.6% for $D = 2.54$ to 93.5% for $D = 0.95$. These differences indicate that the diameter of the impaction surface and therefore the size of boundary layer has a significant impact on the collection efficiency of particles larger than the d_{50}.

A 2.54 cm diameter impaction substrate containing a central disk of PUF_3 with smaller diameters with the outer annulus sealed with nonporous material was tested (Figure 9c). These results show that for the smaller PUF disks (within the 2.54 cm diameter plate), there were higher values of d_{50} and s than for a 2.54 cm PUF diameter. Specifically, while for the full 2.54 cm PUF the d_{50} was 1.12 μm and s was 1.32, for central disk diameters of 0.32, 0.64, 0.95, and 1.58 cm, the corresponding d_{50} and (s) values were 1.70(1.41), 1.43(1.42), 1.33(1.28), and 1.19(1.31) μm, respectively. These results suggest that the presence of nonporous material disturbed the flow pattern and the boundary layer above the impaction surface and thus affected the particle collection efficiency. In addition, these findings indicate that the suggested impaction diameter of two or

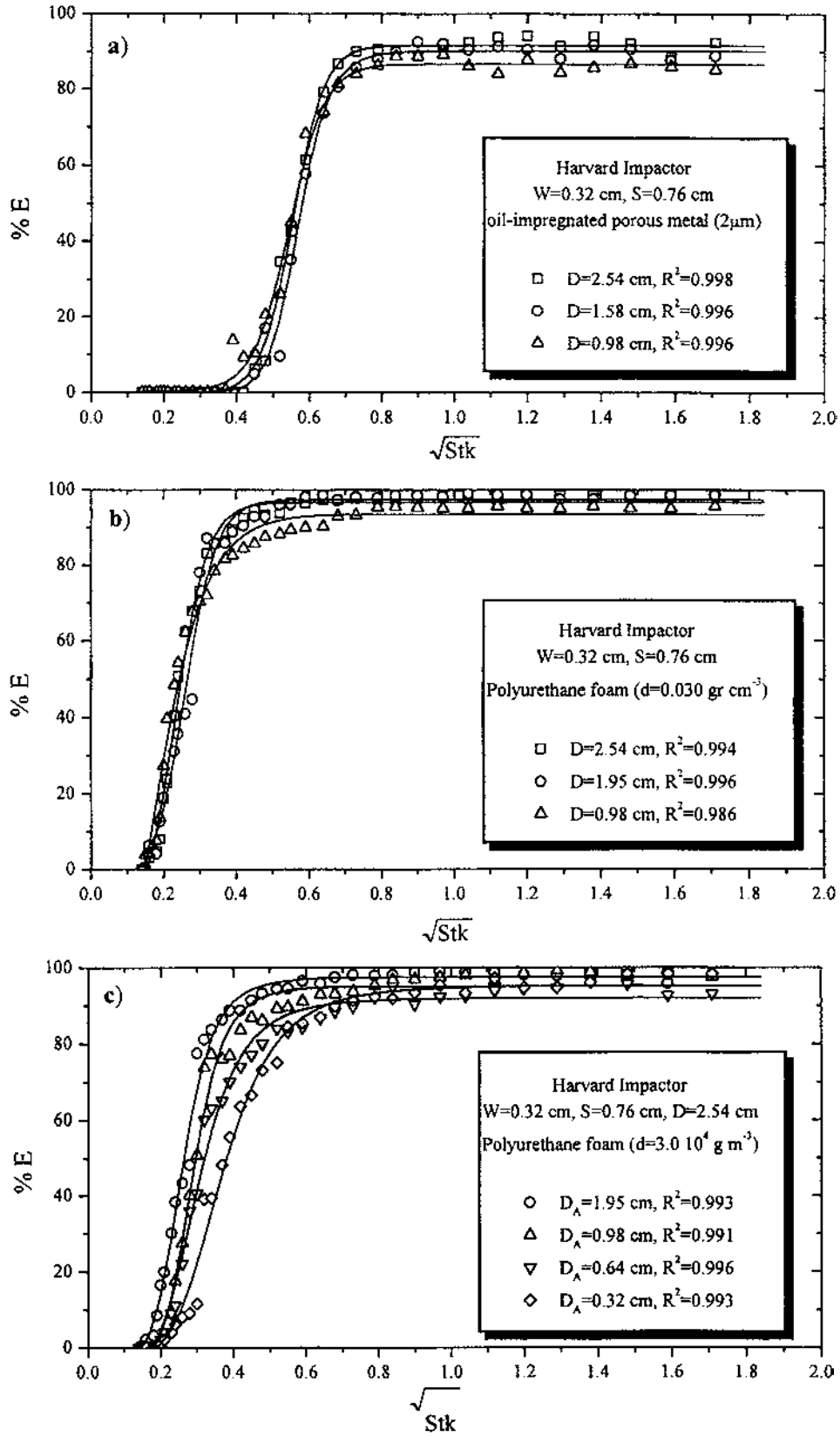

Figure 9. Collection efficiency of HI at 10 L/min using oil-impregnated (a) and PUF (b) at different impaction plate diameters and collection efficiency of PUF substrates placed into a larger impaction plate (c).

three times the nozzle diameter was insufficient for maximum particle collection efficiency for oil-coated porous metal disks.

CONCLUSIONS

Inertial impactors with rigid impactor substrates present bounce-off and reentrainment artifacts that can seriously distort the size distribution of the collected particles. These artifacts are due to the high-energy collision between the accelerated particles and impaction substrate or precollected particles. These distortions can apparently be minimized by replacing conventional impaction substrates, such as oil-coated filters and porous metal plates with PUF.

For the same flow and Reynolds number, use of the PUF substrate resulted in much smaller d_{50} values than those obtained using conventional substrates. This suggests that the use of PUF causes significant changes in the impaction process. It is possible that the porous PUF surface affects the flow pattern above the impaction substrate, resulting in a thinner boundary layer and thus allowing particles with less inertia to collide with the substrate. Particles with enough excess kinetic energy which either bounce or get reentrained from conventional substrates may penetrate deeply enough into the pores of the PUF to considerably reduce these artifact effects. Such a deep penetration could explain why PUF substrates have a relatively large collection capacity compared to conventional substrates. In addition, because a lower d_{50} was achieved at a low pressure drop with PUF than for conventional substrates, it is possible to reduce artifact vaporization of semi-volatile components during sampling, especially for the classification and collection of ultrafine particles.

Finally, we tested the hypothesis that the majority of particles are collected on the PUF substrate by filtration rather than impaction. To accomplish this, we investigated the filtration properties of the PUF substrate. These filtration tests showed poor collection particle efficiencies for coarse particles. This was not the case when PUF was used as an impaction substrate, where high collection efficiencies were obtained for particles above the impactor cut-off size. Therefore this hypothesis was not true and it appears that the predominant mechanism for the collection by the PUF substrate is impaction.

ACKNOWLEDGMENTS

The laboratory performance evaluation of the impaction substrate was supported by U.S. EPA STAR grant no. R825 270-01-0.

REFERENCES

Aitken, R. J., Vincent, J. H., and Mark, D. (1993). Application of Porous Foam as Size Selectors for Biologically Relevant Samplers, *Appl. Occup. Environ. Hyg.* 8:363–369.

Berner, A., Lurzer, C., Pohl, F., Preining, O., and Wagner, P. (1979). The Size Distribution of the Urban Aerosol in Vienna, *Science of Total Environment* 13:245–261.

Biswas, P., and Flagan, R. C. 1988. The Particle Trap Impactor, *J. Aerosol Sci.* 19:113–121.

Chen, C-C., Lai, C-Y., Shih, T-S., and Yel, W-Y. (1998). Development of Respirable Aerosol Samplers using Porous Foams, *J. of Amer. Indus. Hyg. Assoc.* 59:766–773.

Ding, Y., and Koutrakis, P. (1999). Development of a Dichotomous Slit Nozzle Virtual Impactor, *J. Aerosol Sci.*, submitted.

Gibson, H., and Vincent, J. H. (1981). The Penetration of Dust Through Porous Foam Filter Media, *J. Aerosol Sci.* 11:151–159.

Hawthorne, S. B., Miller, D., Langenfeld, J. J., and Krieger, M. S. (1992). PM-10 High-Volume Collection and Quantitation of Semi-Volatile and Nonvolatile Phenols, Methoxylated Phenols, Alkanes and Polycyclic Aromatic Hydrocarbons from Winter Urban Air and their Relationship to Wood Smoke Emissions, *Environ. Sci. Technol.* 26:2251–2262.

Hinds, W. C. (1999). *Aerosol Technology*, 2nd Edition, Wiley & Sons, New York.

Jefferies, R. A. (1974). Publication No S14, Shirley Institute, Manchester, England.

John, W., Fritter, D. N., and Winklmayr, W. (1991). Resuspension Induced by Impacting Particles, *J. Aerosol Sci.* 22:723–736.

John, W., and Sethi, V. (1993). Breakup of Latex Doublets by Impaction, *Aerosol Sci. Technol.* 19:57–68.

Kavouras, I. G., Mihalopoulos, N., and Stephanou, E. G. (1999). Formation and Gas/Particle Partitioning of Monoterpenes Photo-Oxidation Products Over Forests, *Geophysical Research Letters* 26:55–58.

Kavouras, I. G., Ferguson, S. T., Wolfson, J. M., and Koutrakis, P. (2000). Development and Validation of a High Volume Low Cut-Off Inertial Impactor (HVLI), *Inhalation Toxicolocy*, in press.

Marple, V. A., and Liu, B. Y. H. (1974). Characteristics of Laminar Jet Impactors, *Environ. Sci. Technol.* 8:648–654.

Marple, V. A., Rubow, K. L., and Olson, B. A. (1993). Inertial, Gravitational, Centrifugal and Thermal Collection Techniques. In *Aerosol Measurement*, edited by K. Willeke and P. A. Baron. Van Nostrand Reinhold, New York, pp. 106–232.

Marple, V. A., Rubow, K. L., Turner, W. R., and Spengler, J. D. (1987). Low Flow Rate Sharp Cut Impactors for Indoor Air Sampling, *Journal of Air Pollution Control Association* 37:1303–1307.

Milford, J. B., and Davidson, C. I. (1985). The Sizes of Particulate Trace Elements in the Atmosphere, *Journal of Air Pollution Control Association* 35:1249–1260.

Pak, S. S., Liu, B. Y. H., and Rubow, K. L. (1992). Effect of Coating Thickness on Particle Bounce in Inertial Impactors, *Aerosol Sci. Technol.* 16:141–150.

Patton, G. W., McConnell, L. L., Zaranski, M. T., and Bidleman, T. F. (1992). Laboratory Evaluation of Polymeric Foam and Filter Surfaces Granular Adsorbent Sandwich Cartridges for Collecting Chlorophenols from Air, *Analytical Chemistry* 64:2858–2861.

Pierce, R. C., and Katz, M. (1975). Dependency of Polynuclear Aromatic Hydrocarbon Content on Size Distribution of Atmospheric Aerosols, *Environ. Sci. Technol.* 9:347–353.

Sehmel, G. A. (1980). Particle Resuspension: A Review, *Environment International* 4:107–127.

Tsai, C. J., and Cheng, Y. H. (1995). Solid Particle Collection Characteristics on Impaction Surfaces of Different Designs, *Aerosol Sci. Technol.* 23:96–106.

Vanderpool, R. W., Lundgren, D. A., Marple, V. A., and Rubow, K. L. (1987). Cocalibration of Four Large-Particle Impactors, *Aerosol Sci. Technol.* 7:177–185.

Venkataraman, C., Lyons, J. M., and Friedlander, S. K. (1994). Size Distribution of Polycyclic Aromatic Hydrocarbons and Elemental Carbon. 1. Sampling, Measurement Methods and Source Characterization, *Environ. Sci. Technol.* 28:555–562.

Vincent, J. H., Aitken, R. J., and Mark, D. (1993). Porous Plastic Foam Filtration Media: Penetration Characteristics and Applications in Particle Size-Selective Sampling, *J. Aerosol Sci.* 24:929–944.

Wake, D., and Brown, R. C. (1991). Filtration of Monodisperse Aerosols and Polydisperse Dusts by Porous Foam Filters. *J. Aerosol Sci.* 22:693–706.

Wall, S., John, W., Wang, H. C., and Coren, S. L. (1990). Measurement of Kinetic Energy Loss for Particles Impaction Surfaces, *Aerosol Sci. Technol.* 12:926–946.